REV	ZONE	ECN	DESCRIPTION OF REVISION	CK APPD / DATE	ENG APPD / DATE
A		2433	PRODUCTION RELEASE		
B		2544	REVISED PER ECN 4/93	J.K.	
C		2582	REVISED PER ECN 5/93	J.K.	

NOTE: (UNLESS OTHERWISE NOTED)

1. ALL RESISTANCE VALUES ARE IN OHMS, 0.1W, 5%.
2. ALL CAPACITANCE VALUES ARE IN MICROFARADS.

WOMBAT LOGIC BOARD SCHEMATIC

1) Table of Contents

PROCESSOR BUS
- 2) Processor & Clock
- 3) Processor Direct Slot & Bus Termination

MAIN MEMORY SUBSYSTEM
- 4) djMEMC & Buffers
- 5) Memory Buffers
- 6) DRAM (soldered)
- 7) DRAM SIMMs
- 8) ROMs and ROM SIMM

NUBUS
- 9) KIWI NuBus Controller
- 10) Bus Transceivers & Termination
- 11) NuBus Slots

VIDEO SUBSYSTEM
- 12) VRAM
- 13) Video Clk Generator & Pixel Data Filters
- 14) CLUT/DAC

I/O SUBSYSTEM
- 15) BIOS
- 16) SCSI
- 17) Serial Ports
- 18) Ethernet
- 19) ADB, Real Time Clock, & Power-On

SOUND SUBSYSTEM
- 20) Sound Input
- 21) Sound Output

MISCELLANEOUS
- 22) Test Points

POWER CONNECTOR

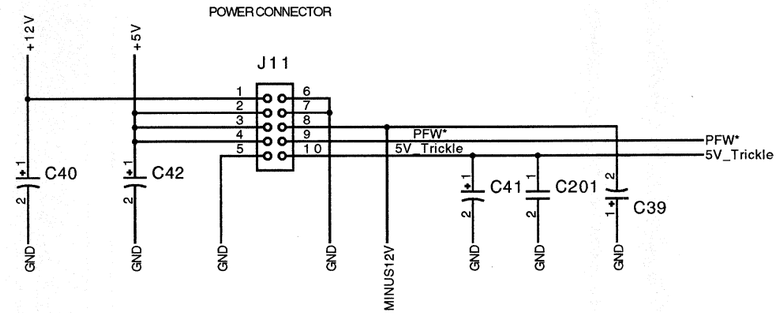

+5V Bulk Distributed Capacitance

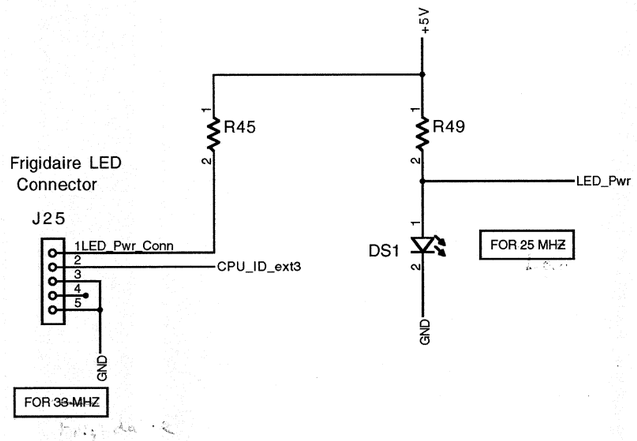

Table of Contents

ECS CAD GENERATED

DIMENSIONS ARE IN MILLIMETERS XX ± ___ XXX ± ___ XXXX ± ___ ANGLES ± ___ DO NOT SCALE DRAWINGS	METRIC		Apple Computer, Inc
	DRAFTER J.K. 1/92	DESIGN CK	NOTICE OF PROPRIETARY PROPERTY THE INFORMATION CONTAINED HEREIN IS THE PROPRIETARY PROPERTY OF APPLE COMPUTER, INC. THE POSSESSOR AGREES TO THE FOLLOWING (I) TO MAINTAIN THE DOCUMENT IN CONFIDENCE (II) NOT TO REPRODUCE OR COPY IT (III) NOT TO REVEAL OR PUBLISH IT IN WHOLE OR PART
	ENG APPD	MFG APPD	
	QA APPD	DESIGNER	TITLE SCHEMATIC, MAIN LOGIC BOARD, QUADRA 800 / CENTRIS 650
THIRD ANGLE PROJECTION	RELEASE	SCALE NONE	
	MATERIAL/FINISH NOTED AS APPLICABLE	SIZE D	DRAWING NUMBER 051-0063 REV. C
			SHT 1 OF 22

D[31:0]
IPL*[2:0]
C16M5V
tpClkSyncOE
HalfClk
HalfClkD
C20M*
MuxPU
clkSync
clkEnable
clkMR
Reset*
clkRC
tpClkRC
clkAGnd
clkVcc
ClkSel
BG*_CPU
BB*
CDis*
MDis*
RW
Snoop_Control[0]
Snoop_Control[1]
TT[0]
TT[1]
BS_CPUIN
BS_Mode*
TRst*
TEA*
TA*
TS*
BS_Clk
Aux_CPU_Clk
BClk1
BClk2
Sys_Reset*
BCk1TermTP
BCk2TermTP
A[31:0]
Size[0]
Size[1]
TM[0]
TM[1]
TM[2]
TLN[0]
TLN[1]
TIP*_CPU
LockE*
UPA0
UPA1
DLE*
MI*
Lock*
CI_Out*
BR*_CPU
TBI*
CPU_Reset_Out*
PCLK
BCLK
TCLK
IPL*[0]
IPL*[1]
IPL*[2]
Control
Address
Data
Stuff for small buffer mode
Stuff for large buffer mode
Place near MC88916
Place Near MC68040
Place These Termination at End of BClk Lines
FOR 25 MHZ USE 106S1912
FOR 33 MHZ USE 106S2002
ECS CAD GENERATED
MC68040 and System Clock
NOTICE OF PROPRIETARY PROPERTY
THE INFORMATION CONTAINED HEREIN IS THE PROPRIETARY PROPERTY OF APPLE COMPUTER, INC. THE POSSESSOR AGREES TO THE FOLLOWING
(I) TO MAINTAIN THE DOCUMENT IN CONFIDENCE
(II) NOT TO REPRODUCE OR COPY IT
(III) NOT TO REVEAL OR PUBLISH IT IN WHOLE OR PART
Apple Computer, Inc
SIZE D
DRAWING NUMBER 051-0063
REV. C
SCALE NONE
SHT 2 OF 22

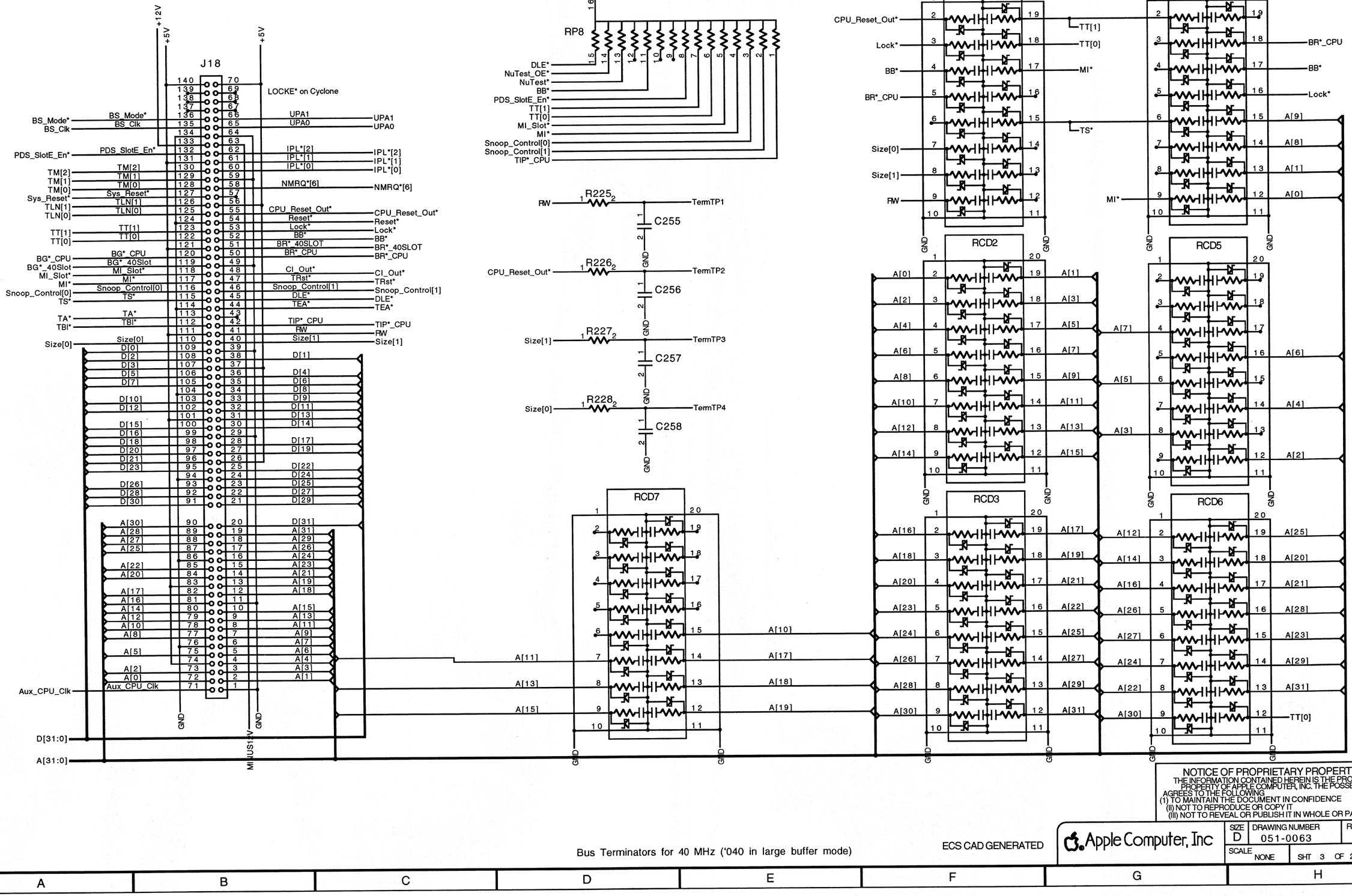

Bus Terminators for 40 MHz ('040 in large buffer mode)

ECS CAD GENERATED

NOTICE OF PROPRIETARY PROPERTY
THE INFORMATION CONTAINED HEREIN IS THE PROPRIETARY PROPERTY OF APPLE COMPUTER, INC. THE POSSESSOR AGREES TO THE FOLLOWING
(I) TO MAINTAIN THE DOCUMENT IN CONFIDENCE
(II) NOT TO REPRODUCE OR COPY IT
(III) NOT TO REVEAL OR PUBLISH IT IN WHOLE OR PART

Apple Computer, Inc

SIZE	DRAWING NUMBER	REV.
D	051-0063	C
SCALE NONE	SHT 3 OF 22	

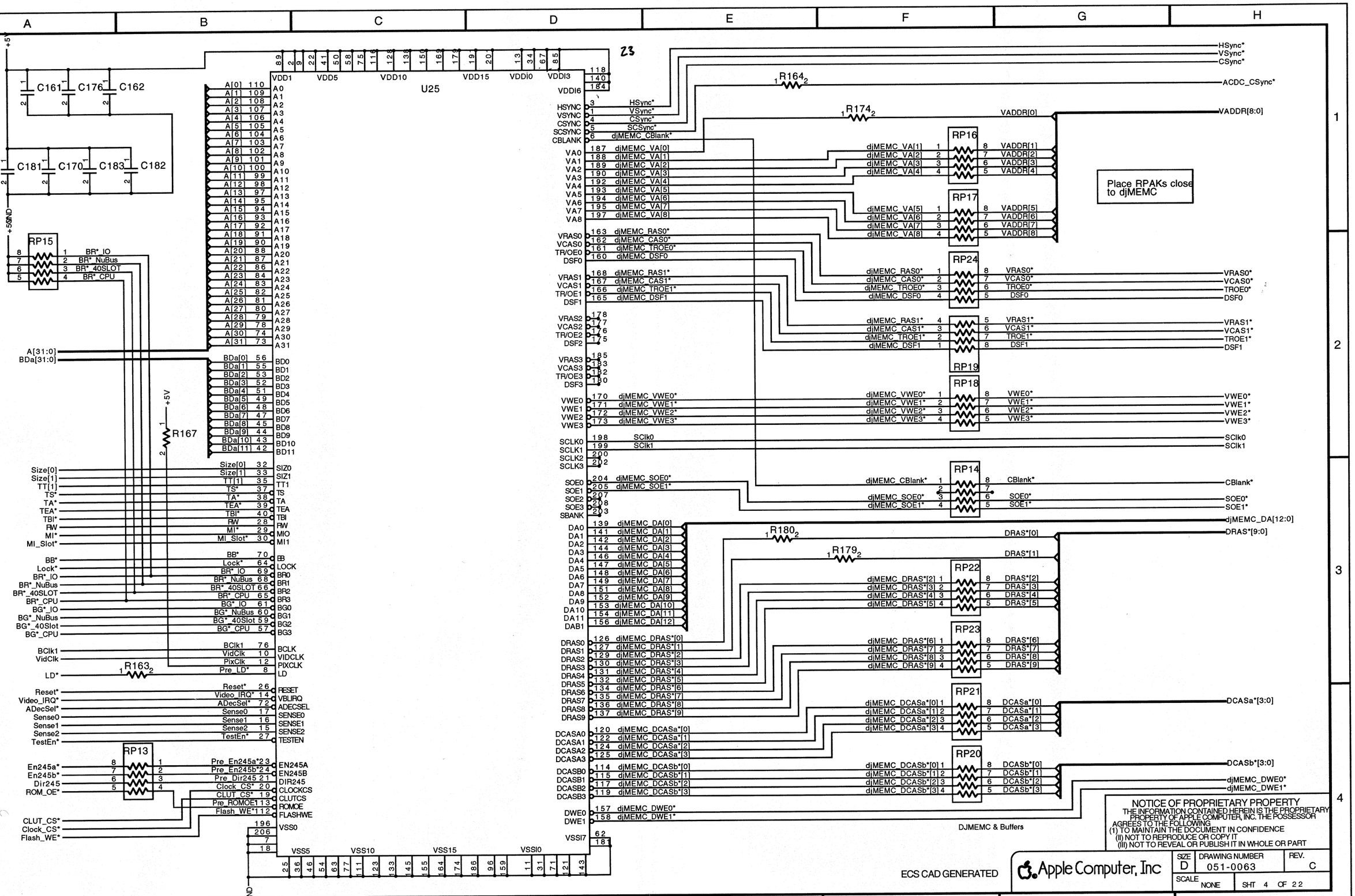
U25
VDD1 VDD5 VDD10 VDD15 VDDI0 VDDI3 VDDI6
VSS0 VSS5 VSS10 VSS15 VSSI0 VSSI7
A0 A1 A2 A3 A4 A5 A6 A7 A8 A9 A10 A11 A12 A13 A14 A15 A16 A17 A18 A19 A20 A21 A22 A23 A24 A25 A26 A27 A28 A29 A30 A31
BD0 BD1 BD2 BD3 BD4 BD5 BD6 BD7 BD8 BD9 BD10 BD11
SIZ0 SIZ1 TT1 TS TA TEA TBI RW MIO MI1
EB LOCK BR0 BR1 BR2 BR3 BG0 BG1 BG2 BG3
BCLK VIDCLK PIXCLK LD RESET VBLIRQ ADECSEL SENSE0 SENSE1 SENSE2 TESTEN
EN245A EN245B DIR245 CLOCKCS CLUTCS ROMOE FLASHWE
HSYNC VSYNC CSYNC SCSYNC CBLANK
VA0 VA1 VA2 VA3 VA4 VA5 VA6 VA7 VA8
VRAS0 VCAS0 TR/OE0 DSF0
VRAS1 VCAS1 TR/OE1 DSF1
VRAS2 VCAS2 TR/OE2 DSF2
VRAS3 VCAS3 TR/OE3 DSF3
VWE0 VWE1 VWE2 VWE3
SCLK0 SCLK1 SCLK2 SCLK3
SOE0 SOE1 SOE2 SOE3 SBANK
DA0 DA1 DA2 DA3 DA4 DA5 DA6 DA7 DA8 DA9 DA10 DA11 DAB1
DRAS0 DRAS1 DRAS2 DRAS3 DRAS4 DRAS5 DRAS6 DRAS7 DRAS8 DRAS9
DCASA0 DCASA1 DCASA2 DCASA3
DCASB0 DCASB1 DCASB2 DCASB3
DWE0 DWE1
HSync* VSync* CSync* SCSync* djMEMC_CBlank*
djMEMC_VA[0] djMEMC_VA[1] djMEMC_VA[2] djMEMC_VA[3] djMEMC_VA[4] djMEMC_VA[5] djMEMC_VA[6] djMEMC_VA[7] djMEMC_VA[8]
djMEMC_RAS0* djMEMC_CAS0* djMEMC_TROE0* djMEMC_DSF0
djMEMC_RAS1* djMEMC_CAS1* djMEMC_TROE1* djMEMC_DSF1
djMEMC_VWE0* djMEMC_VWE1* djMEMC_VWE2* djMEMC_VWE3*
SClk0 SClk1
djMEMC_SOE0* djMEMC_SOE1*
djMEMC_DA[0] djMEMC_DA[1] djMEMC_DA[2] djMEMC_DA[3] djMEMC_DA[4] djMEMC_DA[5] djMEMC_DA[6] djMEMC_DA[7] djMEMC_DA[8] djMEMC_DA[9] djMEMC_DA[10] djMEMC_DA[11] djMEMC_DA[12]
djMEMC_DRAS*[0] djMEMC_DRAS*[1] djMEMC_DRAS*[2] djMEMC_DRAS*[3] djMEMC_DRAS*[4] djMEMC_DRAS*[5] djMEMC_DRAS*[6] djMEMC_DRAS*[7] djMEMC_DRAS*[8] djMEMC_DRAS*[9]
djMEMC_DCASa*[0] djMEMC_DCASa*[1] djMEMC_DCASa*[2] djMEMC_DCASa*[3]
djMEMC_DCASb*[0] djMEMC_DCASb*[1] djMEMC_DCASb*[2] djMEMC_DCASb*[3]
djMEMC_DWE0* djMEMC_DWE1*
R164 R174 R180 R179 R167 R163
RP16 RP17 RP24 RP19 RP18 RP14 RP22 RP23 RP21 RP20 RP15 RP13
VADDR[0] VADDR[1] VADDR[2] VADDR[3] VADDR[4] VADDR[5] VADDR[6] VADDR[7] VADDR[8] VADDR[9] VADDR[8:0]
VRAS0* VCAS0* TROE0* DSF0 VRAS1* VCAS1* TROE1* DSF1 VWE0* VWE1* VWE2* VWE3* CBlank* SOE0* SOE1* DRAS*[0] DRAS*[1] DRAS*[2] DRAS*[3] DRAS*[4] DRAS*[5] DRAS*[6] DRAS*[7] DRAS*[8] DRAS*[9] DRAS*[9:0] DCASa*[0] DCASa*[1] DCASa*[2] DCASa*[3] DCASa*[3:0] DCASb*[0] DCASb*[1] DCASb*[2] DCASb*[3] DCASb*[3:0]
BR*_IO BR*_NuBus BR*_40SLOT BR*_CPU
A[31:0] BDa[31:0] Size[0] Size[1] TT[1] TS* TA* TEA* TBI* RW MI* MI_Slot* BB* Lock* BR*_IO BR*_NuBus BR*_40SLOT BR*_CPU BG*_IO BG*_NuBus BG*_40Slot BG*_CPU BClk1 VidClk LD* Reset* Video_IRQ* ADecSel* Sense0 Sense1 Sense2 TestEn* En245a* En245b* Dir245 ROM_OE* CLUT_CS* Clock_CS* Flash_WE*
Pre_En245a*23 Pre_En245b*24 Pre_Dir245 21 Clock_CS* 20 CLUT_CS* 19 Pre_ROMOE1 13 Flash_WE* 12 Pre_LD* 8
djMEMC_CBlank*
djMEMC_VA[1] djMEMC_VA[2] djMEMC_VA[3] djMEMC_VA[4] djMEMC_VA[5] djMEMC_VA[6] djMEMC_VA[7] djMEMC_VA[8]
djMEMC_RAS0* djMEMC_CAS0* djMEMC_TROE0* djMEMC_DSF0
djMEMC_RAS1* djMEMC_CAS1* djMEMC_TROE1* djMEMC_DSF1
djMEMC_VWE0* djMEMC_VWE1* djMEMC_VWE2* djMEMC_VWE3*
djMEMC_SOE0* djMEMC_SOE1*
djMEMC_DRAS*[2] djMEMC_DRAS*[3] djMEMC_DRAS*[4] djMEMC_DRAS*[5]
djMEMC_DRAS*[6] djMEMC_DRAS*[7] djMEMC_DRAS*[8] djMEMC_DRAS*[9]
djMEMC_DCASa*[0] djMEMC_DCASa*[1] djMEMC_DCASa*[2] djMEMC_DCASa*[3]
djMEMC_DCASb*[0] djMEMC_DCASb*[1] djMEMC_DCASb*[2] djMEMC_DCASb*[3]
C161 C176 C162 C181 C170 C183 C182
+5V +5GND
23
Place RPAKs close to djMEMC
DJMEMC & Buffers
ECS CAD GENERATED
NOTICE OF PROPRIETARY PROPERTY
THE INFORMATION CONTAINED HEREIN IS THE PROPRIETARY PROPERTY OF APPLE COMPUTER, INC. THE POSSESSOR AGREES TO THE FOLLOWING
(I) TO MAINTAIN THE DOCUMENT IN CONFIDENCE
(II) NOT TO REPRODUCE OR COPY IT
(III) NOT TO REVEAL OR PUBLISH IT IN WHOLE OR PART
Apple Computer, Inc
SIZE D
DRAWING NUMBER 051-0063
REV. C
SCALE NONE
SHT 4 OF 22

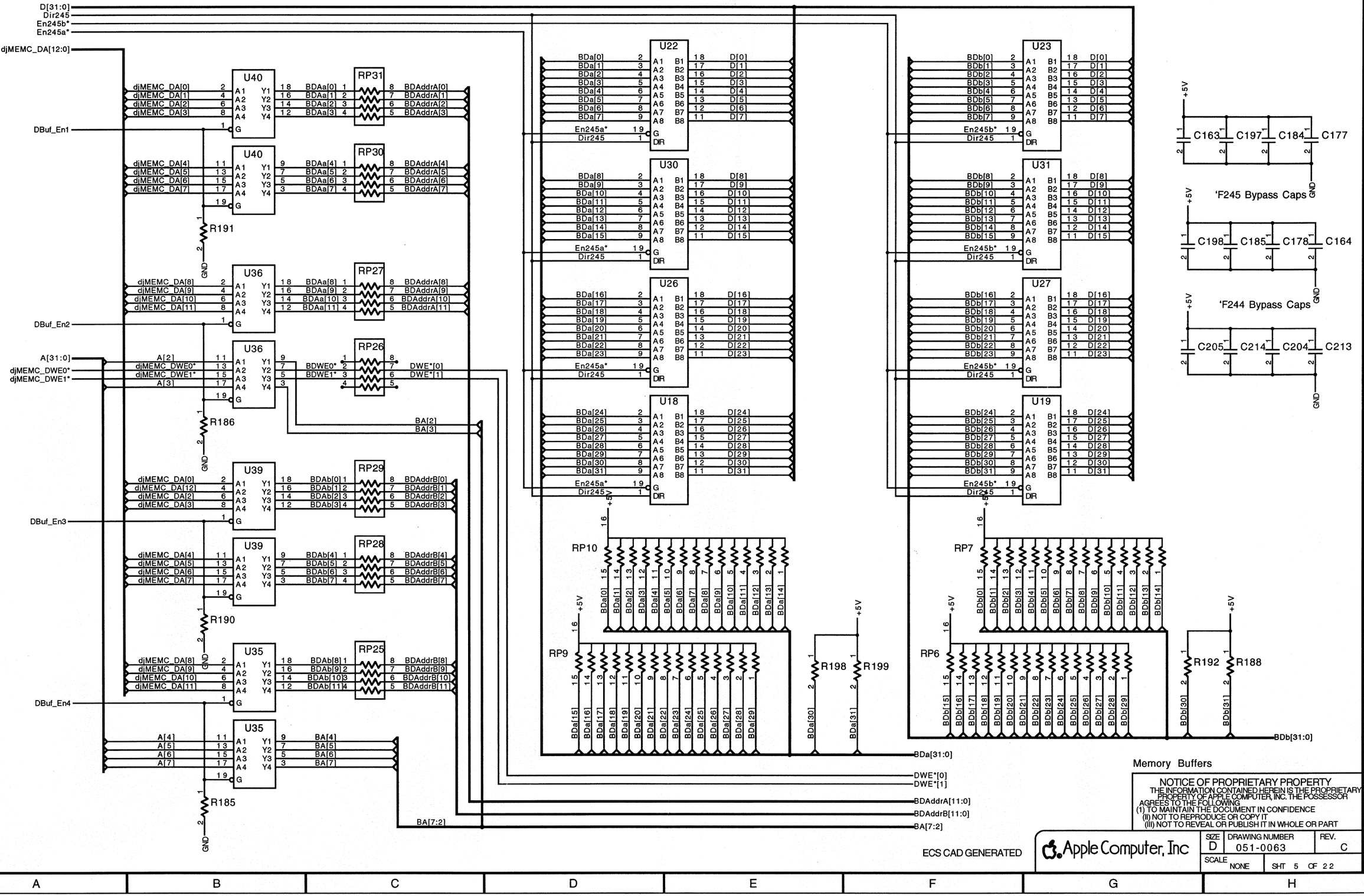

Memory Buffers

NOTICE OF PROPRIETARY PROPERTY
THE INFORMATION CONTAINED HEREIN IS THE PROPRIETARY PROPERTY OF APPLE COMPUTER, INC. THE POSSESSOR AGREES TO THE FOLLOWING
(I) TO MAINTAIN THE DOCUMENT IN CONFIDENCE
(II) NOT TO REPRODUCE OR COPY IT
(III) NOT TO REVEAL OR PUBLISH IT IN WHOLE OR PART

ECS CAD GENERATED

Apple Computer, Inc

SIZE	DRAWING NUMBER	REV.
D	051-0063	C
SCALE NONE	SHT 5 OF 22	

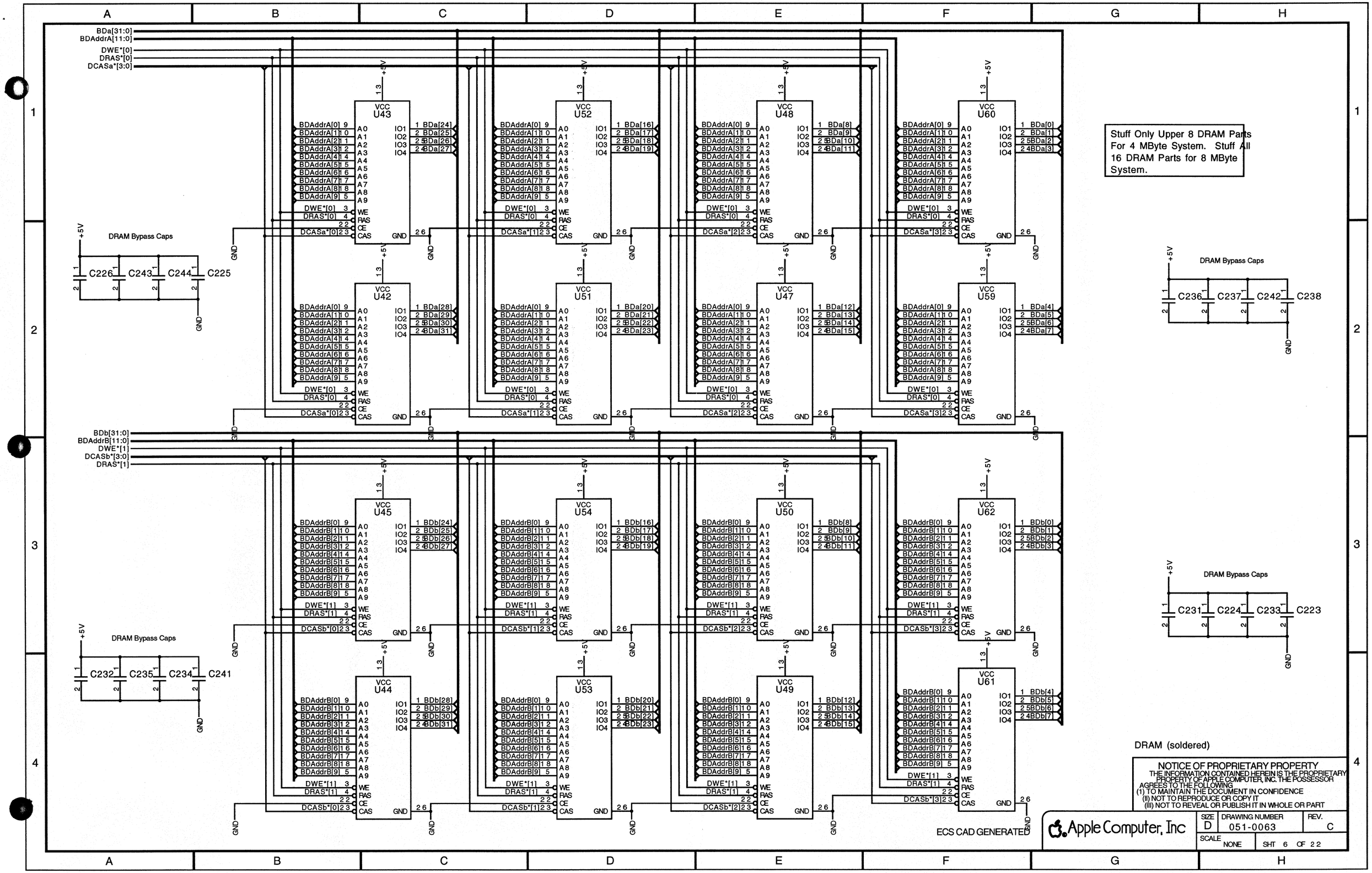

NOTICE OF PROPRIETARY PROPERTY
THE INFORMATION CONTAINED HEREIN IS THE PROPRIETARY PROPERTY OF APPLE COMPUTER, INC. THE POSSESSOR AGREES TO THE FOLLOWING
(1) TO MAINTAIN THE DOCUMENT IN CONFIDENCE
(II) NOT TO REPRODUCE OR COPY IT
(III) NOT TO REVEAL OR PUBLISH IT IN WHOLE OR PART

Apple Computer, Inc

SIZE	DRAWING NUMBER	REV.
D	051-0063	C
SCALE NONE	SHT 6 OF 22	

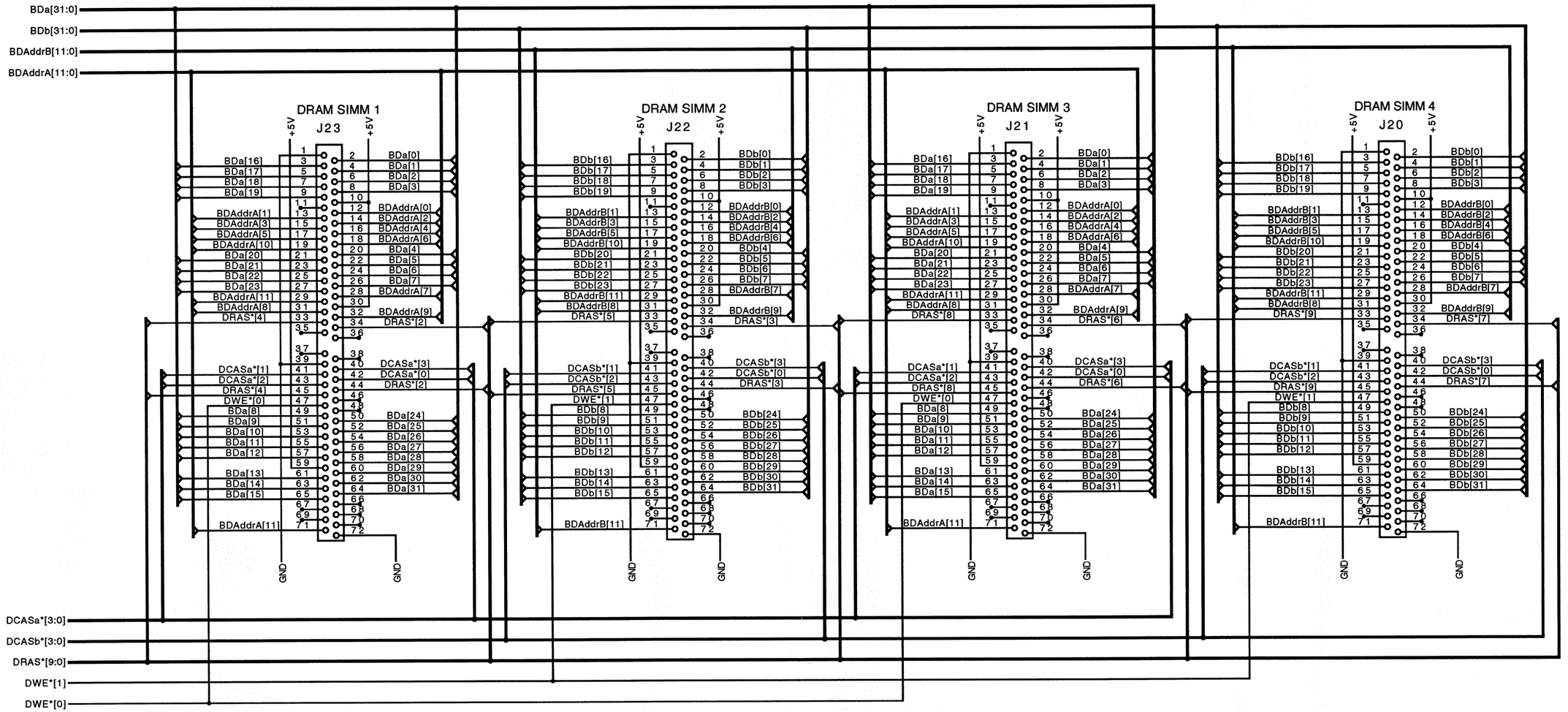

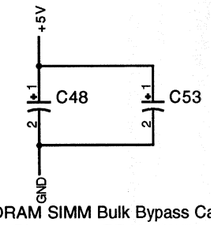

DRAM SIMM Bulk Bypass Caps
Place near DRAM SIMMs

DRAM SIMMs

NOTICE OF PROPRIETARY PROPERTY
THE INFORMATION CONTAINED HEREIN IS THE PROPRIETARY PROPERTY OF APPLE COMPUTER, INC. THE POSSESSOR AGREES TO THE FOLLOWING
(I) TO MAINTAIN THE DOCUMENT IN CONFIDENCE
(II) NOT TO REPRODUCE OR COPY IT
(III) NOT TO REVEAL OR PUBLISH IT IN WHOLE OR PART

ECS CAD GENERATED

Apple Computer, Inc

SIZE	DRAWING NUMBER	REV.
D	051-0063	C
SCALE NONE	SHT 7 OF 22	

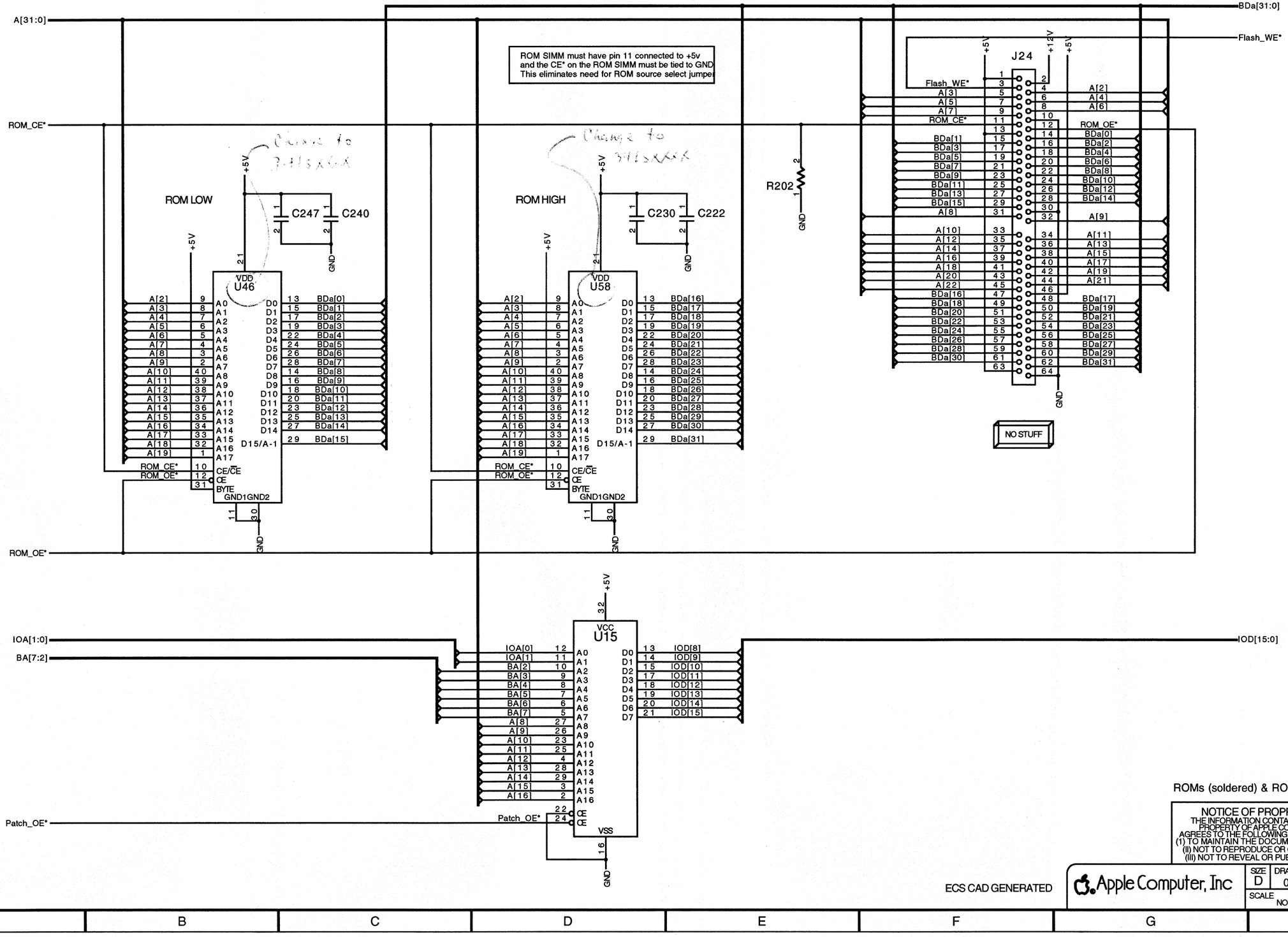

ROMs (soldered) & ROM SIMM

NOTICE OF PROPRIETARY PROPERTY
THE INFORMATION CONTAINED HEREIN IS THE PROPRIETARY PROPERTY OF APPLE COMPUTER, INC. THE POSSESSOR AGREES TO THE FOLLOWING
(I) TO MAINTAIN THE DOCUMENT IN CONFIDENCE
(II) NOT TO REPRODUCE OR COPY IT
(III) NOT TO REVEAL OR PUBLISH IT IN WHOLE OR PART

ECS CAD GENERATED

Apple Computer, Inc

SIZE	DRAWING NUMBER	REV.
D	051-0063	C
SCALE NONE	SHT 8 OF 22	

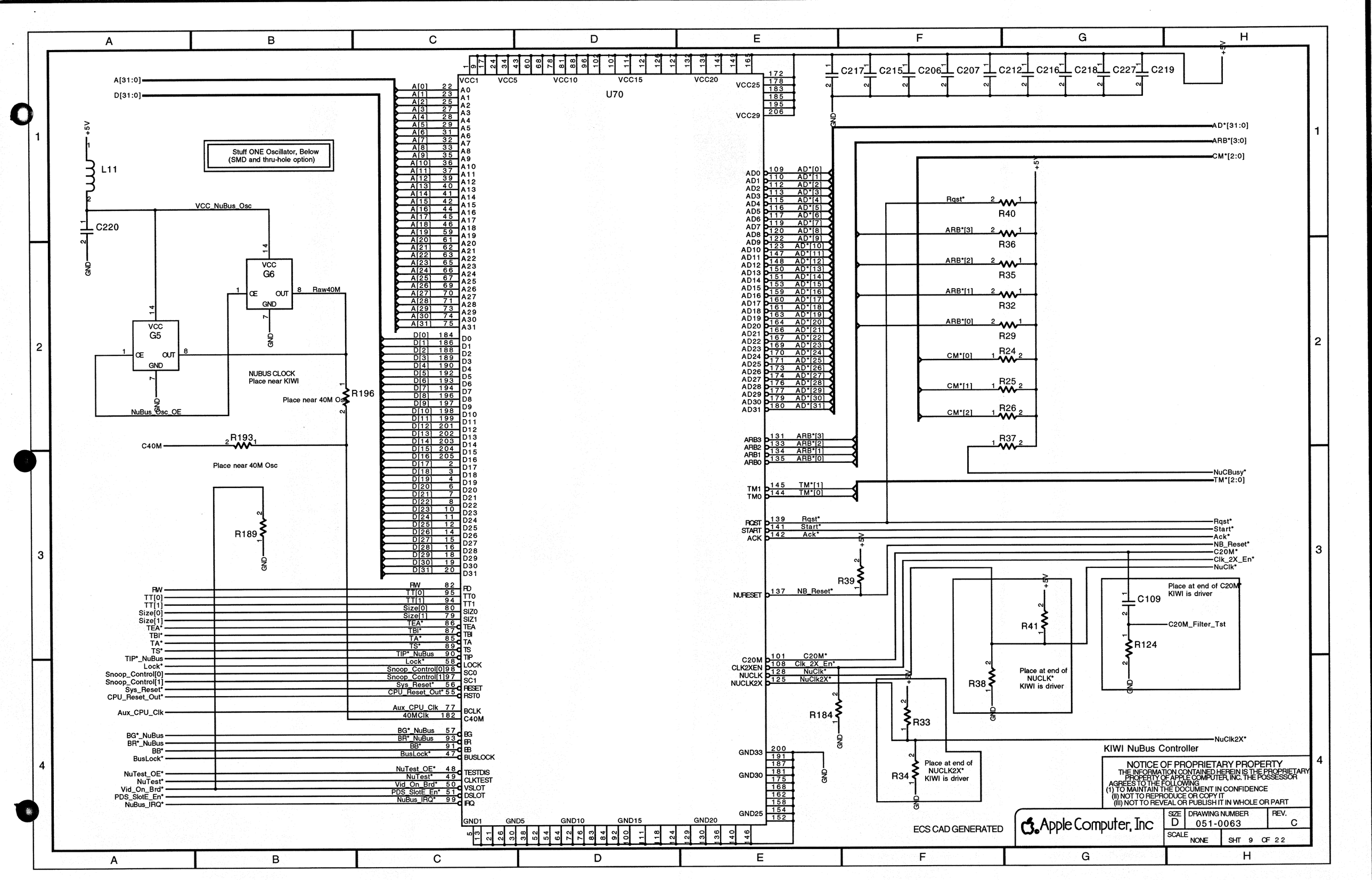

NOTICE OF PROPRIETARY PROPERTY
THE INFORMATION CONTAINED HEREIN IS THE PROPRIETARY PROPERTY OF APPLE COMPUTER, INC. THE POSSESSOR AGREES TO THE FOLLOWING
(I) TO MAINTAIN THE DOCUMENT IN CONFIDENCE
(II) NOT TO REPRODUCE OR COPY IT
(III) NOT TO REVEAL OR PUBLISH IT IN WHOLE OR PART

Apple Computer, Inc

SIZE	DRAWING NUMBER	REV.
D	051-0063	C
SCALE NONE	SHT 9 OF 22	

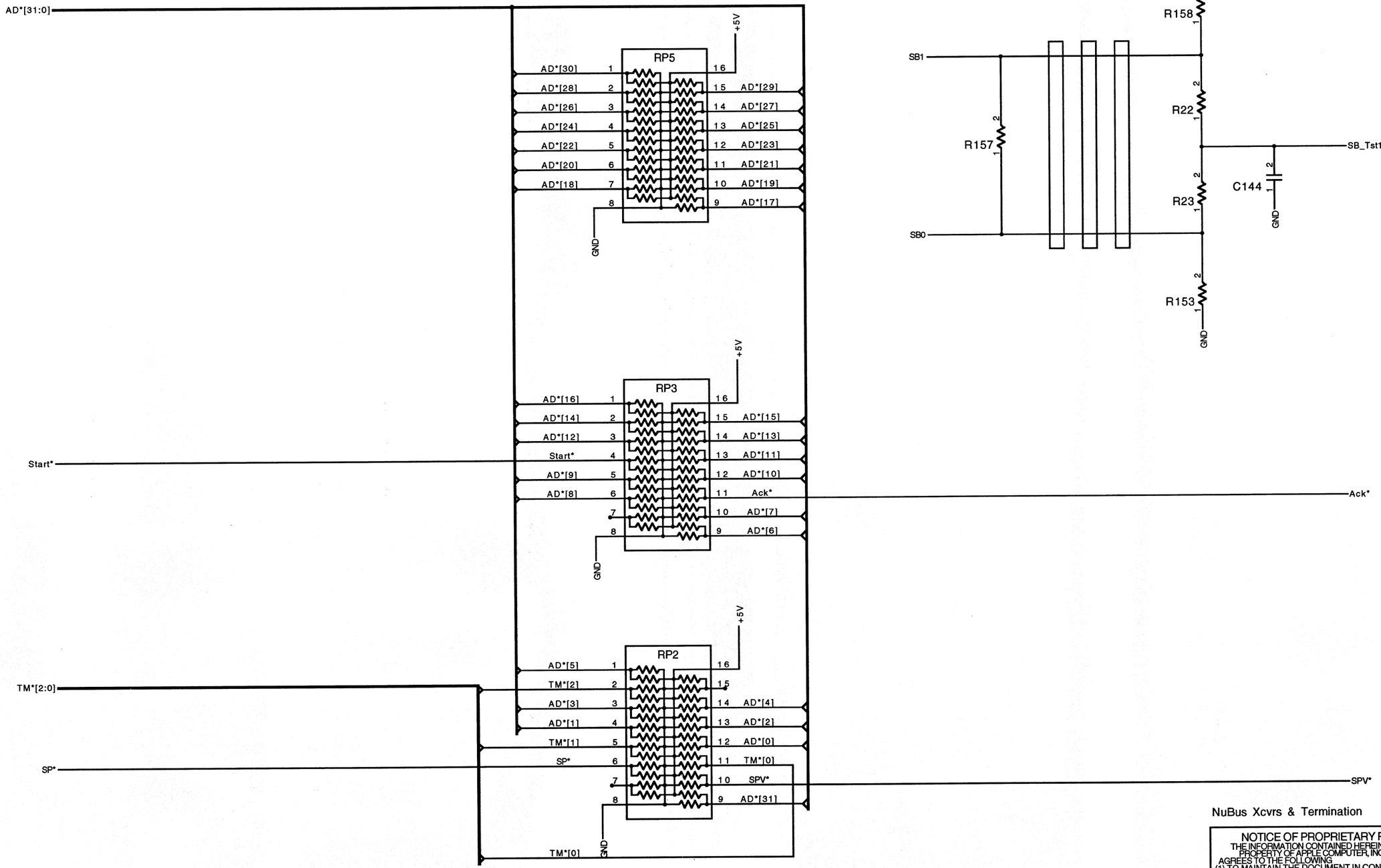

NOTICE OF PROPRIETARY PROPERTY
THE INFORMATION CONTAINED HEREIN IS THE PROPRIETARY PROPERTY OF APPLE COMPUTER, INC. THE POSSESSOR AGREES TO THE FOLLOWING
(I) TO MAINTAIN THE DOCUMENT IN CONFIDENCE
(II) NOT TO REPRODUCE OR COPY IT
(III) NOT TO REVEAL OR PUBLISH IT IN WHOLE OR PART

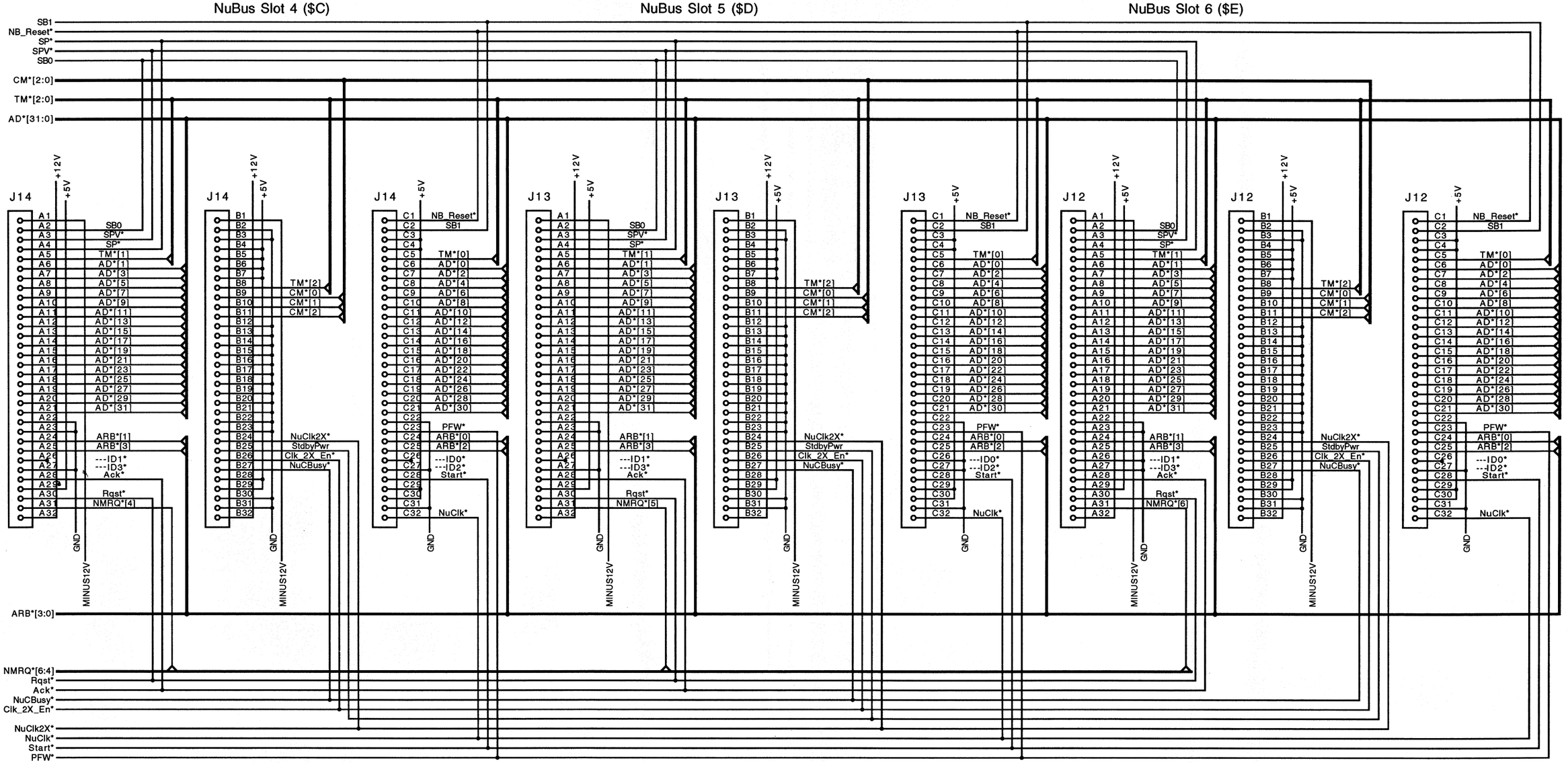

NuBus Slots

NOTICE OF PROPRIETARY PROPERTY
THE INFORMATION CONTAINED HEREIN IS THE PROPRIETARY PROPERTY OF APPLE COMPUTER, INC. THE POSSESSOR AGREES TO THE FOLLOWING
(I) TO MAINTAIN THE DOCUMENT IN CONFIDENCE
(II) NOT TO REPRODUCE OR COPY IT
(III) NOT TO REVEAL OR PUBLISH IT IN WHOLE OR PART

ECS CAD GENERATED

Apple Computer, Inc

SIZE	DRAWING NUMBER	REV.
D	051-0063	C

SCALE NONE

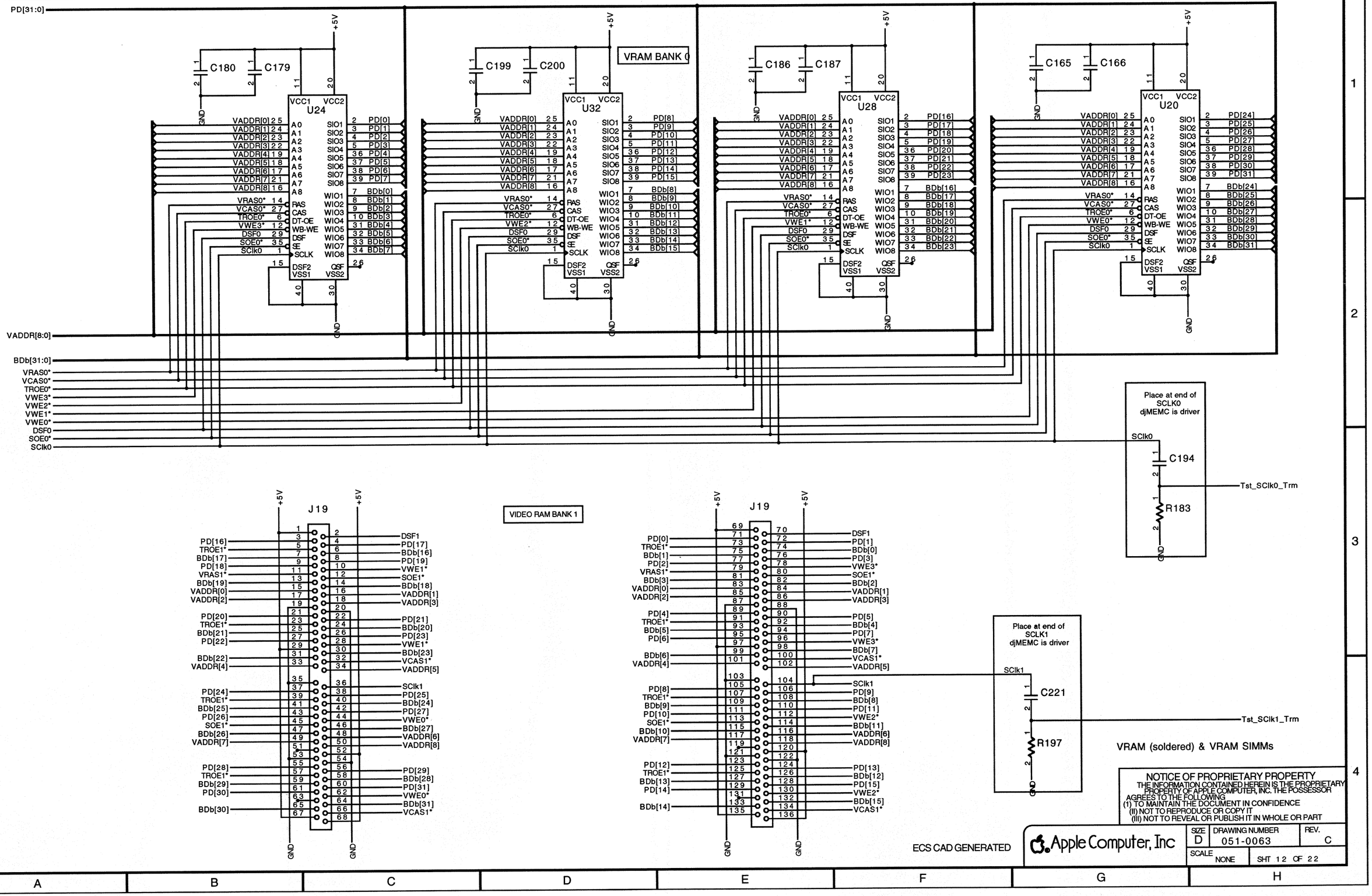
PD[31:0]
VADDR[8:0]
BDb[31:0]
VRAS0*
VCAS0*
TROE0*
VWE3*
VWE2*
VWE1*
VWE0*
DSF0
SOE0*
SClk0
C180
C179
U24
C199
C200
U32
VRAM BANK 0
C186
C187
U28
C165
C166
U20
+5V
GND
VCC1
VCC2
VSS1
VSS2
A0
A1
A2
A3
A4
A5
A6
A7
A8
SIO1
SIO2
SIO3
SIO4
SIO5
SIO6
SIO7
SIO8
WIO1
WIO2
WIO3
WIO4
WIO5
WIO6
WIO7
WIO8
RAS
CAS
DT-OE
WB-WE
DSF
SE
SCLK
DSF2
QSF
Place at end of SCLK0 djMEMC is driver
C194
R183
Tst_SClk0_Trm
J19
VIDEO RAM BANK 1
Place at end of SCLK1 djMEMC is driver
C221
R197
Tst_SClk1_Trm
VRAM (soldered) & VRAM SIMMs
NOTICE OF PROPRIETARY PROPERTY
THE INFORMATION CONTAINED HEREIN IS THE PROPRIETARY PROPERTY OF APPLE COMPUTER, INC. THE POSSESSOR AGREES TO THE FOLLOWING
(I) TO MAINTAIN THE DOCUMENT IN CONFIDENCE
(II) NOT TO REPRODUCE OR COPY IT
(III) NOT TO REVEAL OR PUBLISH IT IN WHOLE OR PART
ECS CAD GENERATED
Apple Computer, Inc
SIZE D
DRAWING NUMBER 051-0063
REV. C
SCALE NONE
SHT 12 OF 22

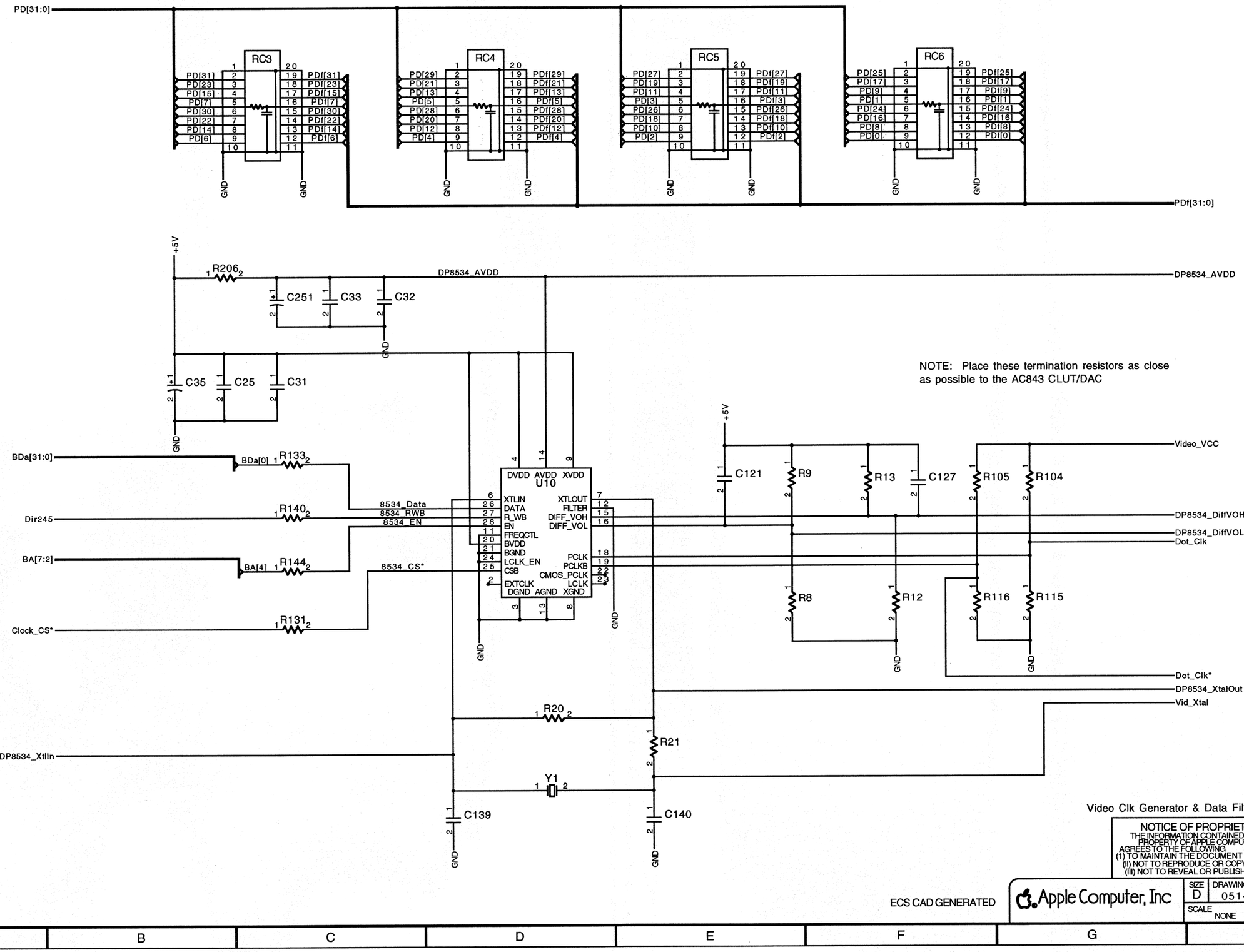

NOTE: Place these termination resistors as close as possible to the AC843 CLUT/DAC

Video Clk Generator & Data Filters

NOTICE OF PROPRIETARY PROPERTY
THE INFORMATION CONTAINED HEREIN IS THE PROPRIETARY PROPERTY OF APPLE COMPUTER, INC. THE POSSESSOR AGREES TO THE FOLLOWING
(I) TO MAINTAIN THE DOCUMENT IN CONFIDENCE
(II) NOT TO REPRODUCE OR COPY IT
(III) NOT TO REVEAL OR PUBLISH IT IN WHOLE OR PART

ECS CAD GENERATED

Apple Computer, Inc

SIZE	DRAWING NUMBER	REV.
D	051-0063	C
SCALE NONE	SHT 13 OF 22	

NOTICE OF PROPRIETARY PROPERTY
THE INFORMATION CONTAINED HEREIN IS THE PROPRIETARY PROPERTY OF APPLE COMPUTER, INC. THE POSSESSOR AGREES TO THE FOLLOWING
(I) TO MAINTAIN THE DOCUMENT IN CONFIDENCE
(II) NOT TO REPRODUCE OR COPY IT
(III) NOT TO REVEAL OR PUBLISH IT IN WHOLE OR PART

ECS CAD GENERATED

Apple Computer, Inc

SIZE	DRAWING NUMBER	REV.
D	051-0063	C
SCALE NONE	SHT 14 OF 22	

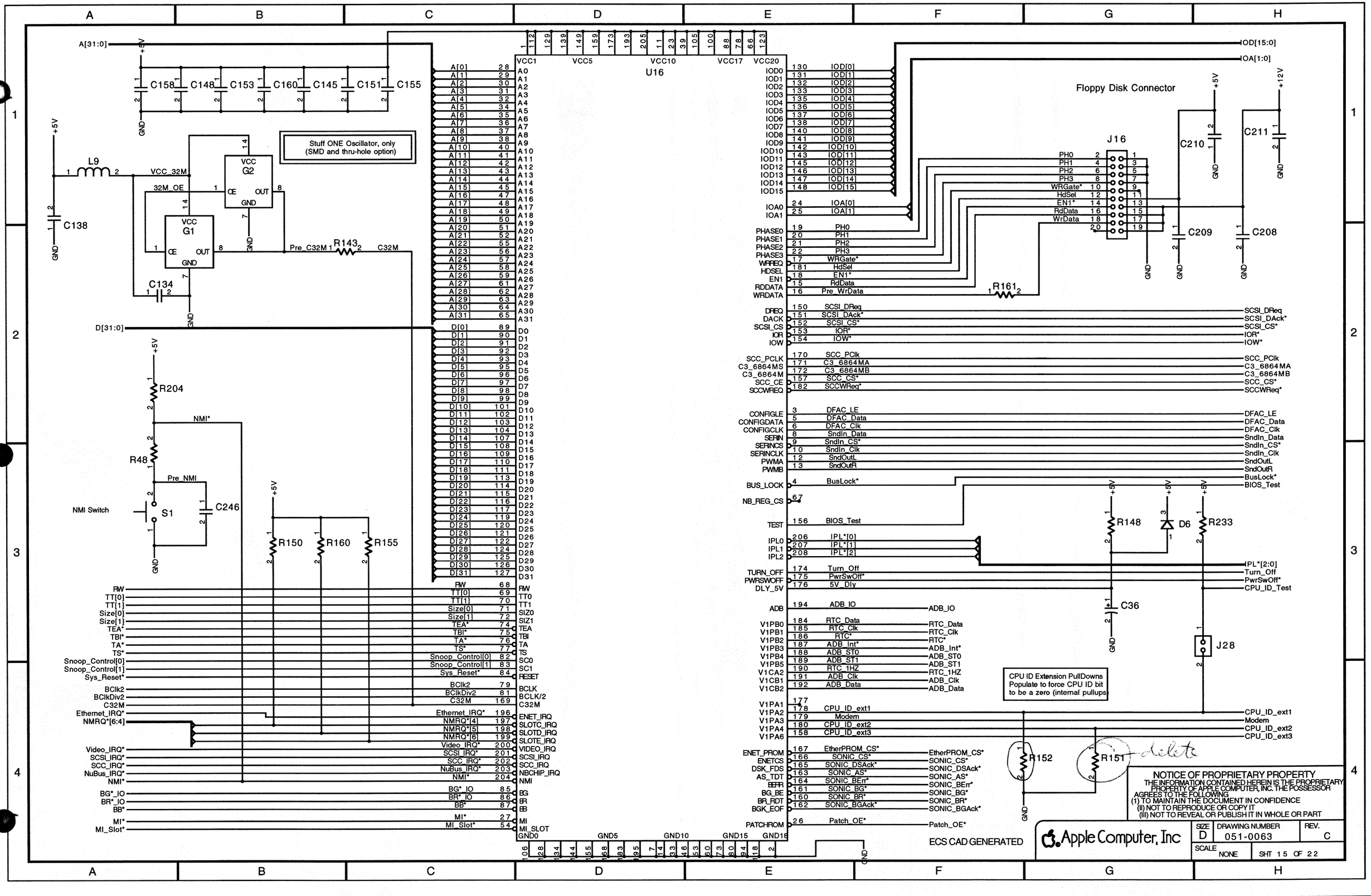
A[31:0]
+5V
C158
C148
C153
C160
C145
C151
C155
GND
Stuff ONE Oscillator, only
(SMD and thru-hole option)
L9
VCC_32M
C138
VCC
G2
32M_OE
OE
OUT
GND
VCC
G1
C134
Pre_C32M
R143
C32M
D[31:0]
R204
NMI*
R48
Pre_NMI
NMI Switch
S1
C246
R150
R160
R155
U16
VCC1
VCC5
VCC10
VCC17
VCC20
A[0] 28 A0
A[1] 29 A1
A[2] 30 A2
A[3] 31 A3
A[4] 32 A4
A[5] 34 A5
A[6] 35 A6
A[7] 36 A7
A[8] 37 A8
A[9] 38 A9
A[10] 40 A10
A[11] 41 A11
A[12] 42 A12
A[13] 43 A13
A[14] 44 A14
A[15] 45 A15
A[16] 47 A16
A[17] 48 A17
A[18] 49 A18
A[19] 50 A19
A[20] 51 A20
A[21] 52 A21
A[22] 55 A22
A[23] 56 A23
A[24] 57 A24
A[25] 58 A25
A[26] 59 A26
A[27] 61 A27
A[28] 62 A28
A[29] 63 A29
A[30] 64 A30
A[31] 65 A31
D[0] 89 D0
D[1] 90 D1
D[2] 91 D2
D[3] 92 D3
D[4] 93 D4
D[5] 95 D5
D[6] 96 D6
D[7] 97 D7
D[8] 98 D8
D[9] 99 D9
D[10] 101 D10
D[11] 102 D11
D[12] 103 D12
D[13] 104 D13
D[14] 107 D14
D[15] 108 D15
D[16] 109 D16
D[17] 110 D17
D[18] 111 D18
D[19] 113 D19
D[20] 114 D20
D[21] 115 D21
D[22] 116 D22
D[23] 117 D23
D[24] 119 D24
D[25] 120 D25
D[26] 121 D26
D[27] 122 D27
D[28] 124 D28
D[29] 125 D29
D[30] 126 D30
D[31] 127 D31
RW 68 RW
TT[0] 69 TT0
TT[1] 70 TT1
Size[0] 71 SIZ0
Size[1] 72 SIZ1
TEA* 74 TEA
TBI* 75 TBI
TA* 76 TA
TS* 77 TS
Snoop_Control[0] 82 SC0
Snoop_Control[1] 83 SC1
Sys_Reset* 84 RESET
BClk2 79 BCLK
BClkDiv2 81 BCLK/2
C32M 169 C32M
Ethernet_IRQ* 196 ENET_IRQ
NMRQ*[4] 197 SLOTC_IRQ
NMRQ*[5] 198 SLOTD_IRQ
NMRQ*[6] 199 SLOTE_IRQ
Video_IRQ* 200 VIDEO_IRQ
SCSI_IRQ* 201 SCSI_IRQ
SCC_IRQ* 202 SCC_IRQ
NuBus_IRQ* 203 NBCHIP_IRQ
NMI* 204 NMI
BG* 85 BG
BR* 86 BR
BB* 87 BB
MI* 27 MI
MI_Slot* 54 MI_SLOT
A[31:0]
D[31:0]
RW
TT[0]
TT[1]
Size[0]
Size[1]
TEA*
TBI*
TA*
TS*
Snoop_Control[0]
Snoop_Control[1]
Sys_Reset*
BClk2
BClkDiv2
C32M
Ethernet_IRQ*
NMRQ*[6:4]
Video_IRQ*
SCSI_IRQ*
SCC_IRQ*
NuBus_IRQ*
NMI*
BG*_IO
BR*_IO
BB*
MI*
MI_Slot*
GND0
GND5
GND10
GND15
GND18
GND
IOD0 130 IOD[0]
IOD1 131 IOD[1]
IOD2 132 IOD[2]
IOD3 133 IOD[3]
IOD4 135 IOD[4]
IOD5 136 IOD[5]
IOD6 137 IOD[6]
IOD7 138 IOD[7]
IOD8 140 IOD[8]
IOD9 141 IOD[9]
IOD10 142 IOD[10]
IOD11 143 IOD[11]
IOD12 145 IOD[12]
IOD13 146 IOD[13]
IOD14 147 IOD[14]
IOD15 148 IOD[15]
IOA0 24 IOA[0]
IOA1 25 IOA[1]
PHASE0 19 PH0
PHASE1 20 PH1
PHASE2 21 PH2
PHASE3 22 PH3
WRREQ 17 WRGate*
HDSEL 181 HdSel
EN1 18 EN1*
RDDATA 15 RdData
WRDATA 16 Pre_WrData
R161
DREQ 150 SCSI_DReq
DACK 151 SCSI_DAck*
SCSI_CS 152 SCSI_CS*
IOR 153 IOR*
IOW 154 IOW*
SCC_PCLK 170 SCC_PClk
C3_6864MS 171 C3_6864MA
C3_6864M 172 C3_6864MB
SCC_CE 157 SCC_CS*
SCCWREQ 182 SCCWReq*
CONFIGLE 3 DFAC_LE
CONFIGDATA 5 DFAC_Data
CONFIGCLK 6 DFAC_Clk
SERIN 8 SndIn_Data
SERINCS 9 SndIn_CS*
SERINCLK 10 SndIn_Clk
PWMA 12 SndOutL
PWMB 13 SndOutR
BUS_LOCK 4 BusLock*
NB_REG_CS 67
TEST 156 BIOS_Test
IPL0 206 IPL*[0]
IPL1 207 IPL*[1]
IPL2 208 IPL*[2]
TURN_OFF 174 Turn_Off
PWRSWOFF 175 PwrSwOff*
DLY_5V 176 5V_Dly
ADB 194 ADB_IO
V1PB0 184 RTC_Data
V1PB1 185 RTC_Clk
V1PB2 186 RTC*
V1PB3 187 ADB_Int*
V1PB4 188 ADB_ST0
V1PB5 189 ADB_ST1
V1CA2 190 RTC_1HZ
V1CB1 191 ADB_Clk
V1CB2 192 ADB_Data
V1PA1 177
V1PA2 178 CPU_ID_ext1
V1PA3 179 Modem
V1PA4 180 CPU_ID_ext2
V1PA6 158 CPU_ID_ext3
ENET_PROM 167 EtherPROM_CS*
ENETCS 166 SONIC_CS*
DSK_FDS 165 SONIC_DSAck*
AS_TDT 163 SONIC_AS*
BERR 164 SONIC_BErr*
BG_BE 161 SONIC_BG*
BR_RDT 160 SONIC_BR*
BGK_EOF 162 SONIC_BGAck*
PATCHROM 26 Patch_OE*
OD[15:0]
OA[1:0]
Floppy Disk Connector
J16
PH0 2 1
PH1 4 3
PH2 6 5
PH3 8 7
WRGate* 10 9
HdSel 12 11
EN1* 14 13
RdData 16 15
WrData 18 17
20 19
C210
C211
C209
C208
SCSI_DReq
SCSI_DAck*
SCSI_CS*
IOR*
IOW*
SCC_PClk
C3_6864MA
C3_6864MB
SCC_CS*
SCCWReq*
DFAC_LE
DFAC_Data
DFAC_Clk
SndIn_Data
SndIn_CS*
SndIn_Clk
SndOutL
SndOutR
BusLock*
BIOS_Test
R148
D6
R233
IPL*[2:0]
Turn_Off
PwrSwOff*
CPU_ID_Test
C36
J28
CPU ID Extension PullDowns
Populate to force CPU ID bit
to be a zero (internal pullups)
CPU_ID_ext1
Modem
CPU_ID_ext2
CPU_ID_ext3
R152
R151
delete
ECS CAD GENERATED
NOTICE OF PROPRIETARY PROPERTY
THE INFORMATION CONTAINED HEREIN IS THE PROPRIETARY PROPERTY OF APPLE COMPUTER, INC. THE POSSESSOR AGREES TO THE FOLLOWING
(I) TO MAINTAIN THE DOCUMENT IN CONFIDENCE
(II) NOT TO REPRODUCE OR COPY IT
(III) NOT TO REVEAL OR PUBLISH IT IN WHOLE OR PART
Apple Computer, Inc
SIZE D
DRAWING NUMBER 051-0063
REV. C
SCALE NONE
SHT 15 OF 22

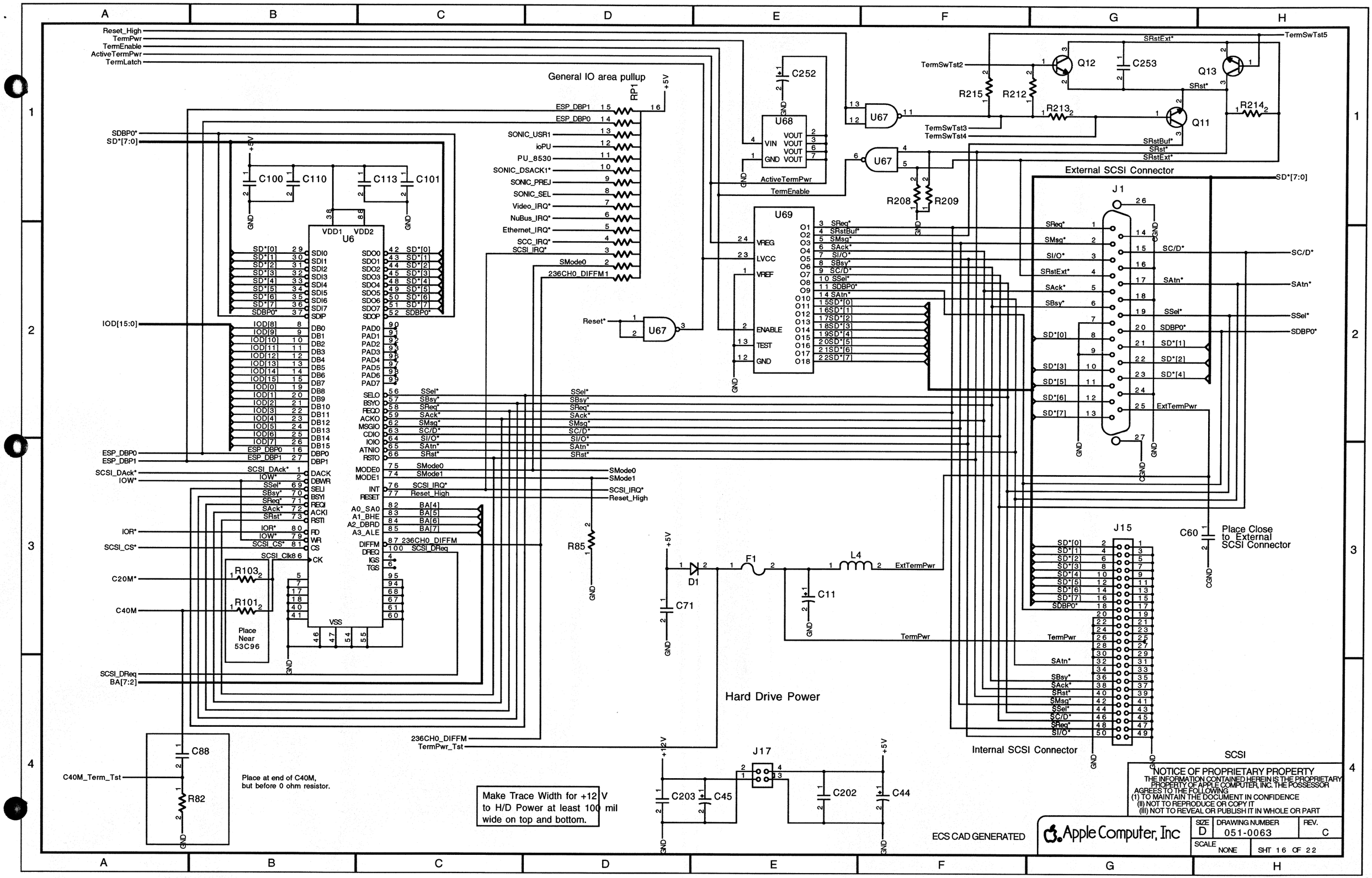

General IO area pullup
External SCSI Connector
Internal SCSI Connector
Hard Drive Power
Place Near 53C96
Place at end of C40M, but before 0 ohm resistor.
Make Trace Width for +12 V to H/D Power at least 100 mil wide on top and bottom.
Place Close to External SCSI Connector
SCSI
NOTICE OF PROPRIETARY PROPERTY
THE INFORMATION CONTAINED HEREIN IS THE PROPRIETARY PROPERTY OF APPLE COMPUTER, INC. THE POSSESSOR AGREES TO THE FOLLOWING
(I) TO MAINTAIN THE DOCUMENT IN CONFIDENCE
(II) NOT TO REPRODUCE OR COPY IT
(III) NOT TO REVEAL OR PUBLISH IT IN WHOLE OR PART
ECS CAD GENERATED
Apple Computer, Inc
SIZE D
DRAWING NUMBER 051-0063
REV. C
SCALE NONE
SHT 16 OF 22

Unused in Paks
MODEM PORT
J6
PRINTER PORT
J7
U4
U5
U1
U2
U13
VR1
C105
C106
C107
C108
C116
C29
C59
C262
C143
C142
C70
C69
R74
R75
RC1
RC2
8530 Bypass Caps
Two 0.01µF and one 47µF near 26LS30s
TxDA
RTSA*
DTRA*
TxDB
RTSB*
DTRB*
TxDA+
TxDA~
HskOA
TxDB+
TxDB~
HskOB
TxDAf+
TxDAf~
HskOAf
TxDBf+
TxDBf~
HskOBf
GPIAF
RxDAf+
RxDAf~
HskIAf
GPIBF
RxDBf+
RxDBf~
HskIBf
GPIA
RxDA+
RxDA~
HskIA
GPIB
RxDB+
RxDB~
HskIB
RxDA
CTSA*
C3_6864MA
NC
RxDB
CTSB*
DCDB*
DCDA*
ioPU
Modem
C3_6864MA
DCDB*
DCDA*
RxDB
RxDA
C3_6864MB
IOR*
IOW*
PU_8530
IOA[1]
SCC_CS*
BA[7:2]
SCC_PClk
IOD[15:0]
SCCWReq*
SCC_IRQ*
RTSB*
DTRB*
TxDB
RTSA*
DTRA*
TxDA
Serial Drivers, Receivers, & Connectors
NOTICE OF PROPRIETARY PROPERTY
THE INFORMATION CONTAINED HEREIN IS THE PROPRIETARY PROPERTY OF APPLE COMPUTER, INC. THE POSSESSOR AGREES TO THE FOLLOWING:
(I) TO MAINTAIN THE DOCUMENT IN CONFIDENCE
(II) NOT TO REPRODUCE OR COPY IT
(III) NOT TO REVEAL OR PUBLISH IT IN WHOLE OR PART
ECS CAD GENERATED
Apple Computer, Inc
SIZE D
DRAWING NUMBER 051-0063
REV. C
SCALE NONE
SHT 17 OF 22

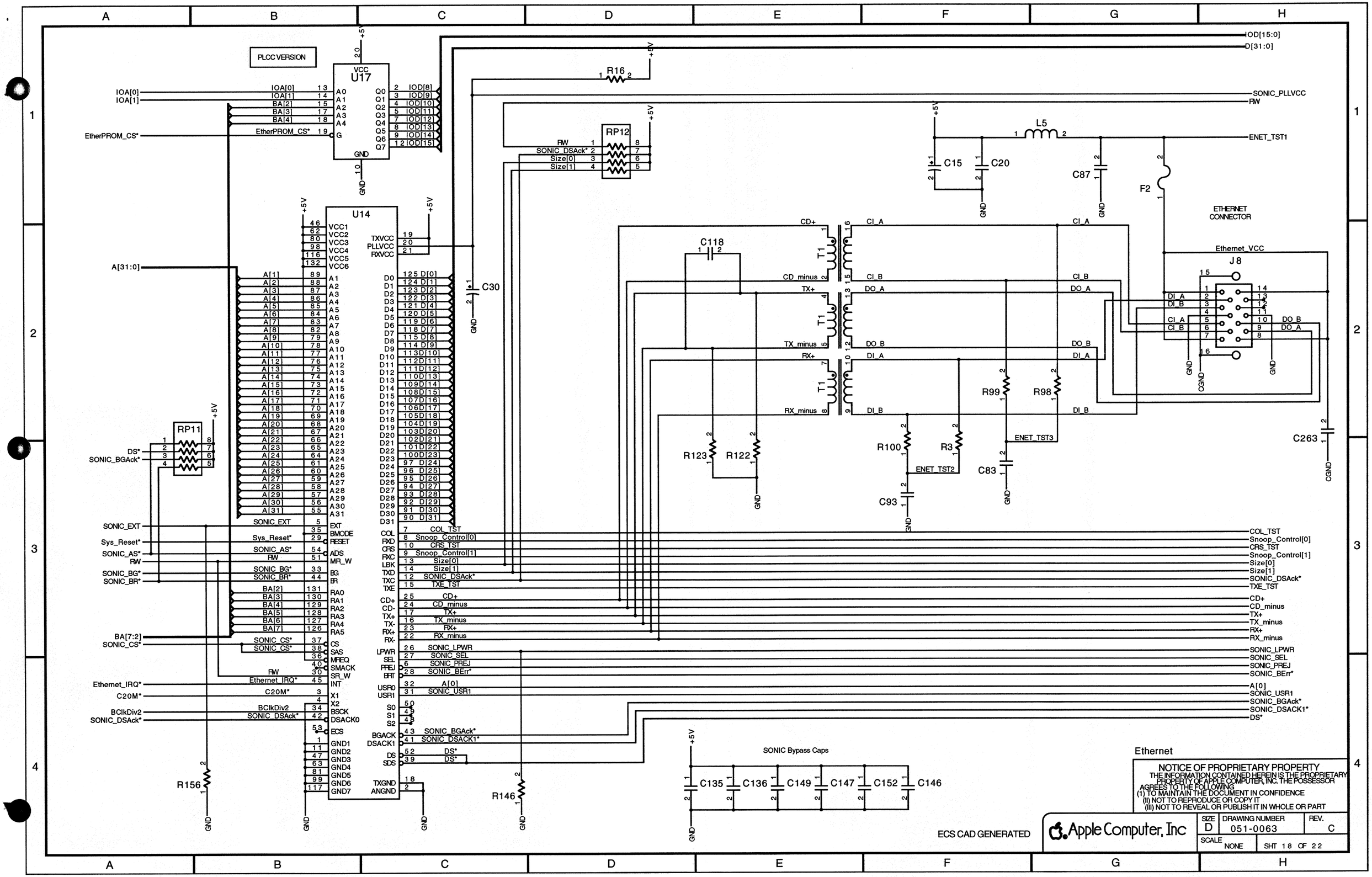
PLCC VERSION
U17
U14
RP11
RP12
ETHERNET CONNECTOR
J8
SONIC Bypass Caps
Ethernet
NOTICE OF PROPRIETARY PROPERTY
THE INFORMATION CONTAINED HEREIN IS THE PROPRIETARY PROPERTY OF APPLE COMPUTER, INC. THE POSSESSOR AGREES TO THE FOLLOWING
(I) TO MAINTAIN THE DOCUMENT IN CONFIDENCE
(II) NOT TO REPRODUCE OR COPY IT
(III) NOT TO REVEAL OR PUBLISH IT IN WHOLE OR PART
ECS CAD GENERATED
Apple Computer, Inc
SIZE D
DRAWING NUMBER 051-0063
REV. C
SCALE NONE
SHT 18 OF 22

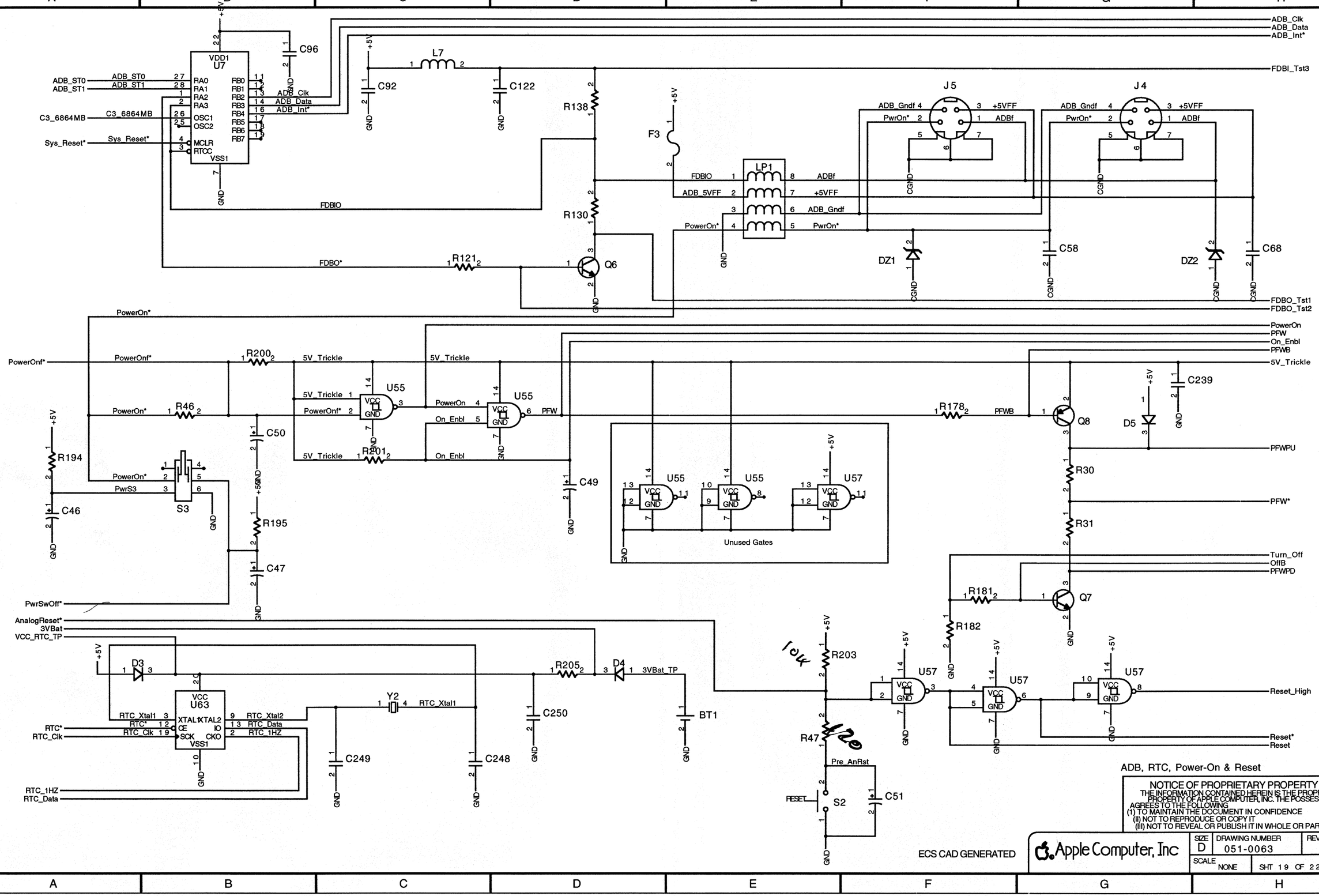

ADB, RTC, Power-On & Reset

NOTICE OF PROPRIETARY PROPERTY
THE INFORMATION CONTAINED HEREIN IS THE PROPRIETARY PROPERTY OF APPLE COMPUTER, INC. THE POSSESSOR AGREES TO THE FOLLOWING
(I) TO MAINTAIN THE DOCUMENT IN CONFIDENCE
(II) NOT TO REPRODUCE OR COPY IT
(III) NOT TO REVEAL OR PUBLISH IT IN WHOLE OR PART

ECS CAD GENERATED

Apple Computer, Inc

SIZE	DRAWING NUMBER	REV.
D	051-0063	C
SCALE NONE	SHT 19 OF 22	

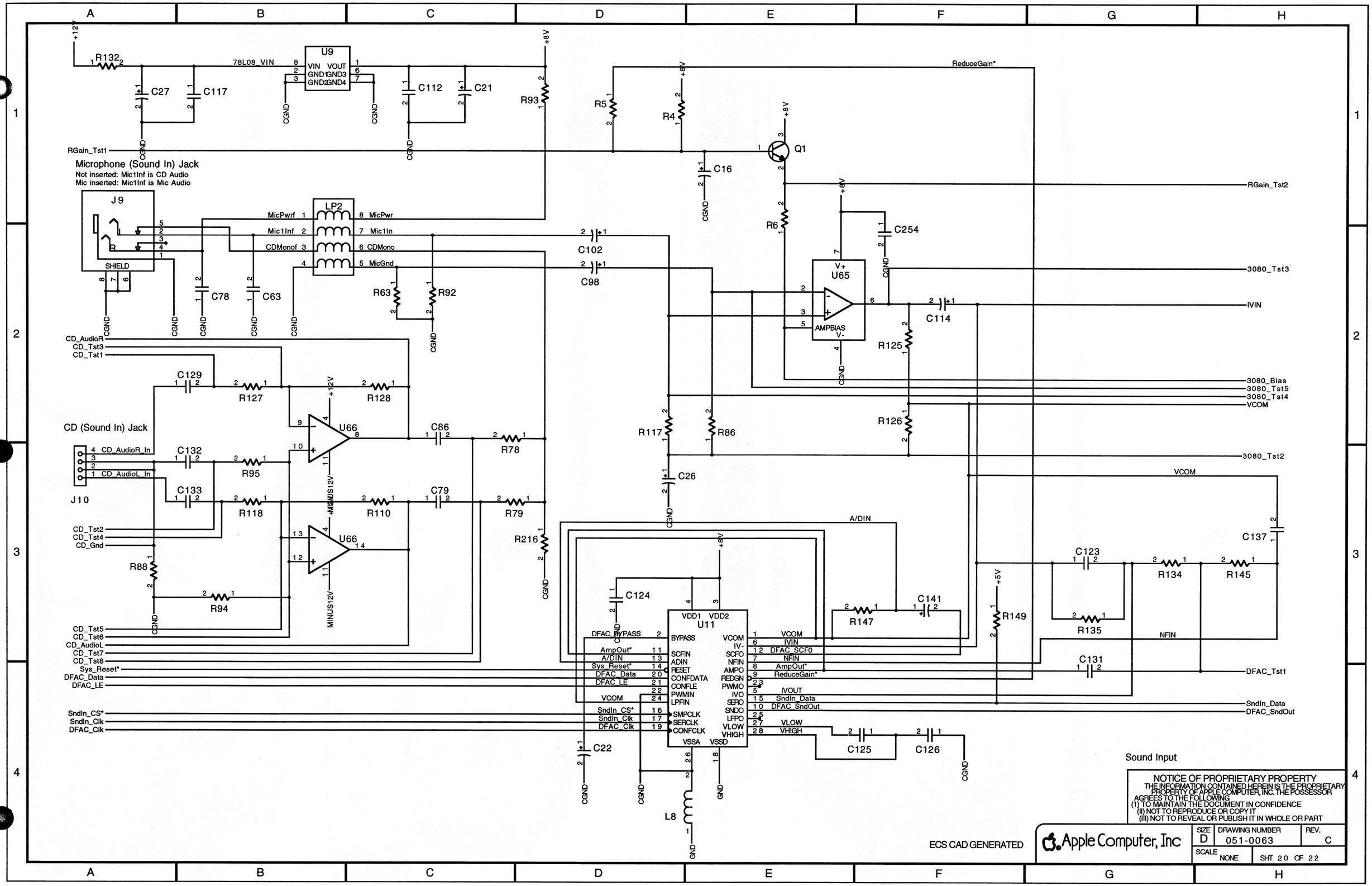

Microphone (Sound In) Jack
Not inserted: Mic1Inf is CD Audio
Mic inserted: Mic1Inf is Mic Audio
CD (Sound In) Jack
Sound Input
ECS CAD GENERATED
Apple Computer, Inc
NOTICE OF PROPRIETARY PROPERTY
THE INFORMATION CONTAINED HEREIN IS THE PROPRIETARY PROPERTY OF APPLE COMPUTER, INC. THE POSSESSOR AGREES TO THE FOLLOWING
(I) TO MAINTAIN THE DOCUMENT IN CONFIDENCE
(II) NOT TO REPRODUCE OR COPY IT
(III) NOT TO REVEAL OR PUBLISH IT IN WHOLE OR PART
SIZE D
DRAWING NUMBER 051-0063
REV. C
SCALE NONE
SHT 20 OF 22

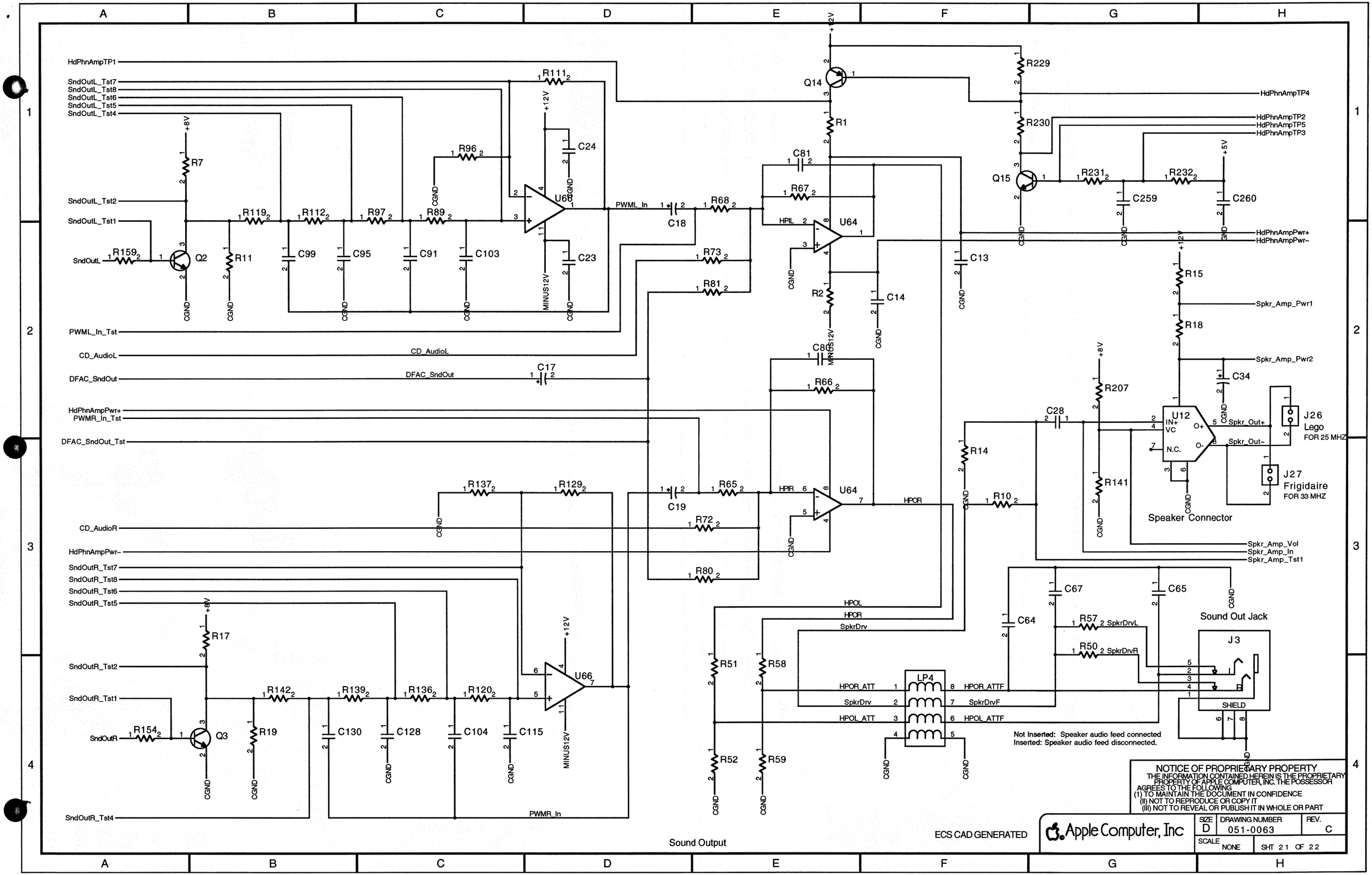

NOTICE OF PROPRIETARY PROPERTY
THE INFORMATION CONTAINED HEREIN IS THE PROPRIETARY PROPERTY OF APPLE COMPUTER, INC. THE POSSESSOR AGREES TO THE FOLLOWING
(I) TO MAINTAIN THE DOCUMENT IN CONFIDENCE
(II) NOT TO REPRODUCE OR COPY IT
(III) NOT TO REVEAL OR PUBLISH IT IN WHOLE OR PART

Apple Computer, Inc

SIZE	DRAWING NUMBER	REV.
D	051-0063	C
SCALE NONE	SHT 21 OF 22	

GND
TP212
TP122
TP252
TP72
TP76
TP419
TP421
TP289
TP225
TP316

+5V
TP191
TP123
TP96
TP297
TP258
TP103
TP418
TP102
TP422
TP281
TP315

CGND
TP8
TP175

+8WTNUS5V
TP130
TP148

236CH0_DIFFM TP172
2X_Clk TP280
3080_Tst2 TP147
3080_Tst3 TP137
3080_Tst4 TP125
3080_Tst5 TP97
3VBat TP417
40MClk TP369
5V_Dly TP219
78L08_VIN TP151
8534_CS* TP135
8534_Data TP163
8534_EN TP180
8534_RWB TP164
A/DIN TP224
AC843_Comp TP58
AC843_FSAdj TP95
AC843_VIDCLK TP118
AC843_VRef TP57
ACDC_CSync* TP82
ADB_5VFF TP62
ADB_Clk TP140
ADB_Data TP239
ADB_IO TP24
ADB_Int* TP111
ADB_ST0 TP240
ADB_ST1 TP109
AmpOut* TP213
AnalogReset* TP410
BA[4] TP120
BA[5] TP121
BA[6] TP256
BA[7] TP257
BCk1TermTP TP296
BCk2TermTP TP273
BClk0 TP298
BClk2 TP287
BClkDiv2 TP247
BDAa[0] TP360
BDWE0* TP25
BDAa[7] TP358
BDAa[8] TP336
BDAb[0] TP357
DFAC_SCF0 TP223
DFAC_SndOut TP194
DFAC_SndOut_Tst TP59
DFAC_Tst1 TP192
DP8534_DiffVOH TP181
DP8534_DiffVOL TP150
DP8534_AVDD TP500
MicPwr TP69
MicGnd TP17
TestEn* TP276

BDAb[7] TP355
BDAb[8] TP335
SpkrDrvF TP7
SpkrDrvL TP20
BG*_IO TP282
BG*_NuBus TP348
BR*_IO TP288
BR*_NuBus TP372
Blue TP119
BusLock* TP370
SpkrDrvR TP4
C20M* TP328
C20M_Filter_Tst TP131
C32M TP203
C3_6864MA TP29
C3_6864MB TP187
C40M TP368
C40M_Term_Tst TP55
CBlank* TP80
CD+ TP113
CD_AudioL TP27
CD_AudioR TP153
CD_Tst1 TP155
CD_Tst2 TP199
CD_Tst3 TP152
CD_Tst4 TP215
CD_Tst5 TP106
CD_Tst6 TP73
CD_Tst7 TP47
CD_minus TP142
CLUT_CS* TP105
CPU_ID_ext3 TP241
CPU_ID_ext1 TP242
CPU_ID_ext2 TP249
CSync* TP42
CTSA* TP88
CTSB* TP33
Clock_CS* TP143
DBuf_En1 TP351
DBuf_En2 TP333
DBuf_En3 TP350
DBuf_En4 TP330
DCDA* TP11
DCDB* TP12
DFAC_BYPASS TP165
DFAC_Clk TP214
DFAC_Data TP200
DFAC_LE TP198
IOD[9] TP228
IOR* TP186
IOD[8] TP221
LED_Pwr TP423
CDMono TP70

DP8534_XtalOut TP190
DP8534_XtlIn TP229
DRAS*[0] TP393
DRAS*[1] TP394
DS* TP226
DSF0 TP321
DTRA* TP141
DTRB* TP188
Dir245 TP259
Dot_Clk TP144
Dot_Clk* TP136
ENET_TST1 TP71
ENET_TST2 TP65
ENET_TST3 TP54
ESP_DBP0 TP179
ESP_DBP1 TP174
En245a* TP324
En245b* TP299
EtherPROM_CS* TP277
Ethernet_IRQ* TP184
FDBIO TP100
FDBI_Tst3 TP157
FDBO* TP127
FDBO_Tst1 TP128
FDBO_Tst2 TP110
GPIA TP30
GPIB TP31
Green TP92
HalfClk TP5
HPIL TP26
HPIR TP22
HPOL TP6
HPOL_ATTF TP1
HPOR TP48
CDMonof TP2
Mic1Inf TP19
HSync* TP41
HdPhnAmpPwr+ TP60
HdPhnAmpPwr- TP74
HsklA TP51
HsklB TP52
HskOA TP78
HskOB TP63
IOA[0] TP270
IOA[1] TP271
IOD[0] TP251
IOD[1] TP248
IOD[10] TP208
IOD[11] TP237
IOD[12] TP133
IOD[13] TP162
Reset TP404
CD_Tst8 TP46

IOW* TP160
IVIN TP146
IVOUT TP145
LD* TP81
MicPwrf TP9
DI_A TP13
CI_B TP93
DO_B TP94
HPOR_ATTF TP18
HPOR_ATT TP3
HPOL_ATT TP16
SpkrDrv TP15
3080_Bias TP21
Modem TP10
NFIN TP193
NMI* TP412
Pre_En245a* TP278
Pre_LD* TP274
Pre_WrData TP262
RGain_Tst1 TP84
RGain_Tst2 TP124
RTC* TP420
NuTest* TP362
PowerOn TP401
PowerOnf* TP400
RTC_1HZ TP231
RTC_Clk TP232
RTC_Data TP414
RTC_Xtal1 TP415
RTC_Xtal2 TP413
RTSA* TP149
RTSB* TP129
NuTest_OE* TP365
OffB TP306
On_Enbl TP403
RX+ TP116
RX_minus TP117
Red TP66
ReduceGain* TP182
Reset_High TP326
RxDA TP28
RxDA+ TP49
RxDA- TP38
RxDB TP32
RxDB+ TP53
RxDB- TP39
PDf[25] TP266
PDf[27] TP265
PDf[29] TP264
PDf[31] TP263
SndOutR_Tst8 TP126
Mic1In TP67
Video_VCC TP83

PFW TP402
PFWB TP304
PFWPD TP301
PFWPU TP307
PU_8530 TP206
PWML_In TP99
PWML_In_Tst TP23
PWMR_In TP108
PWMR_In_Tst TP37
Patch_OE* TP267
PixClk TP283
SB_Tst1 TP245
SCCWReq* TP170
SCC_CS* TP158
SCC_IRQ* TP238
SCC_PClk TP216
SCSI_CS* TP79
SCSI_Clk TP91
SCSI_DAck* TP161
SCSI_DReq TP156
SCSI_IRQ* TP178
SCSync* TP275
SClk0 TP319
IOD[14] TP189
IOD[15] TP244
IOD[2] TP268
IOD[3] TP222
IOD[4] TP217
IOD[5] TP173
IOD[6] TP132
IOD[7] TP134
Spkr_Amp_In TP168
Spkr_Amp_Pwr1 TP202
Spkr_Amp_Pwr2 TP195
Spkr_Amp_Tst1 TP139
SMode0 TP171
SMode1 TP56
SOE0* TP292
SONIC_AS* TP233
SONIC_BErr* TP227
SONIC_BG* TP243
SONIC_BGAck* TP235
SONIC_BR* TP234
SONIC_CS* TP209
SONIC_DSACK1* TP205
SONIC_DSAck* TP236
SONIC_EXT TP250
SONIC_LPWR TP220
SONIC_PLLVCC TP211
SONIC_PREJ TP207
SONIC_SEL TP210
BIOS_Test TP246

SONIC_USR1 TP185
SndIn_CS* TP218
SndIn_Clk TP197
SndIn_Data TP196
SndOutL TP261
SndOutL_Tst1 TP260
SndOutL_Tst2 TP107
SndOutL_Tst4 TP98
SndOutL_Tst5 TP87
SndOutL_Tst6 TP75
SndOutL_Tst7 TP86
SndOutL_Tst8 TP61
SndOutR TP254
SndOutR_Tst1 TP253
SndOutR_Tst2 TP201
SndOutR_Tst4 TP177
SndOutR_Tst5 TP176
SndOutR_Tst6 TP169
SndOutR_Tst7 TP154
TROE0* TP325
TX+ TP114
TX_minus TP115
TermPwr_Tst TP14
Tst_SClk0_Trm TP320
Tst_SClk1_Trm TP383
Turn_Off TP314
TxDA TP101
TxDA+ TP89
TxDA- TP77
TxDB TP112
TxDB+ TP90
TxDB- TP64
VCAS0* TP322
Spkr_Amp_Vol TP183
VCC_RTC_TP TP416
VCOM TP167
VHIGH TP138
VLOW TP166
VRAS0* TP317
VSync* TP40
VidClk TP104
Vid_On_Brd* TP354
Vid_Xtal TP230
Video_IRQ* TP204
NuBus_IRQ* TP371
clkAGnd TP293
clkEnable TP295
clkMR TP279
clkRC TP286
djMEMC_DRAS*[0] TP310
djMEMC_DRAS*[1] TP305
BA[2] TP159

clkVcc TP294
djMEMC_CBlank* TP284
djMEMC_DA[0] TP349
djMEMC_DA[1] TP359
djMEMC_DA[10] TP338
djMEMC_DA[11] TP343
djMEMC_DA[12] TP318
djMEMC_DA[2] TP356
djMEMC_DA[3] TP363
djMEMC_DA[4] TP366
djMEMC_DA[5] TP364
djMEMC_DA[6] TP361
djMEMC_DA[7] TP352
djMEMC_DA[8] TP332
djMEMC_DA[9] TP334
djMEMC_DCASa*[3] TP309
djMEMC_DCASb*[0] TP308
clkSync TP34
MuxPU TP35
djMEMC_VWE3* TP302
ioPU TP50
tpClkRC TP272
tpClkSyncOE TP269
BA[3] TP255
djMEMC_DWE0* TP344
djMEMC_DWE1* TP339
djMEMC_RAS0* TP313
djMEMC_RAS1* TP303
djMEMC_DRAS*[9] TP312
djMEMC_DRAS*[5] TP311
djMEMC_VA[0] TP300
djMEMC_VA[4] TP290
djMEMC_VA[8] TP291
TermLatch TP501
TermEnable TP502
ActiveTermPwr TP503
TermSwTst2 TP505
TermSwTst3 TP506
TermSwTst4 TP507
TermSwTst5 TP508
SRstBuf* TP509
TermTP1 TP511
TermTP2 TP512
TermTP3 TP513
TermTP4 TP514
HalfClkD TP510
HdPhnAmpTP1 TP515
HdPhnAmpTP2 TP516
HdPhnAmpTP3 TP517
HdPhnAmpTP4 TP518
HdPhnAmpTP5 TP519
Reset* TP411

Test Points

NOTICE OF PROPRIETARY PROPERTY
THE INFORMATION CONTAINED HEREIN IS THE PROPRIETARY PROPERTY OF APPLE COMPUTER, INC. THE POSSESSOR AGREES TO THE FOLLOWING
(I) TO MAINTAIN THE DOCUMENT IN CONFIDENCE
(II) NOT TO REPRODUCE OR COPY IT
(III) NOT TO REVEAL OR PUBLISH IT IN WHOLE OR PART

ECS CAD GENERATED

Apple Computer, Inc

SIZE	DRAWING NUMBER	REV.
D	051-0063	C
SCALE NONE		SHT 22 OF 22