3. ITEMS SHOWN WITHIN DASHED LINES ARE LOCATED OFF THE BOARD AND SHOWN FOR REFERENCE ONLY.

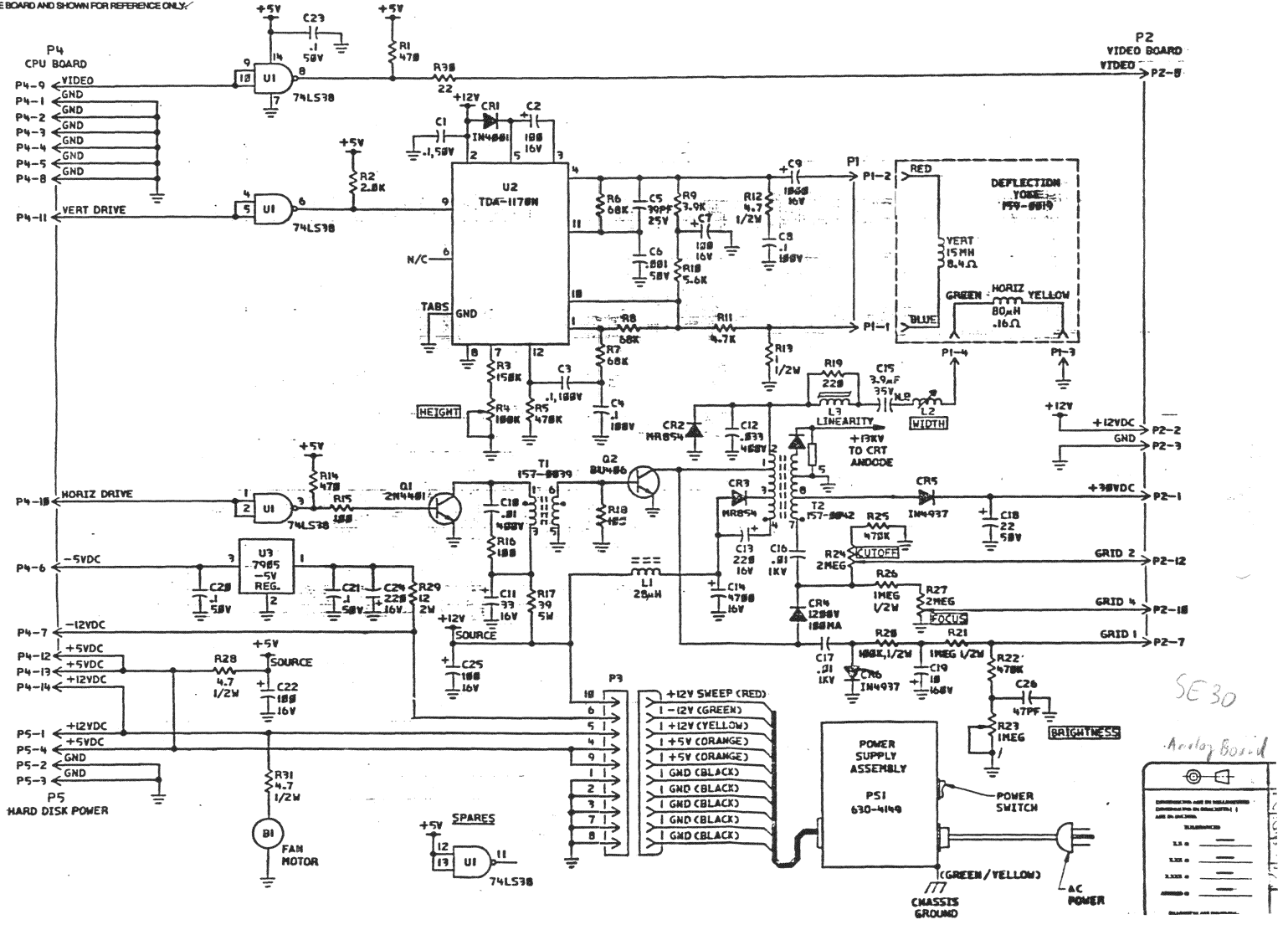

SE30

Analog Board